K805GX4ME30
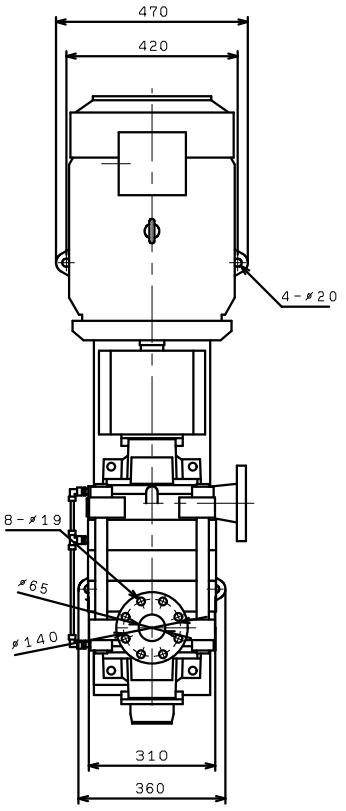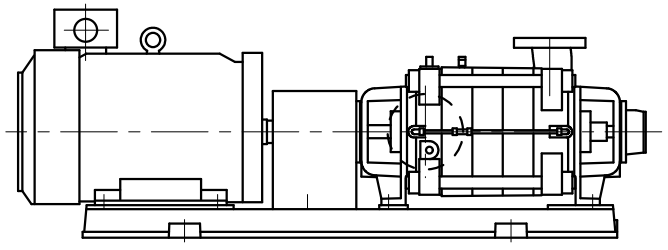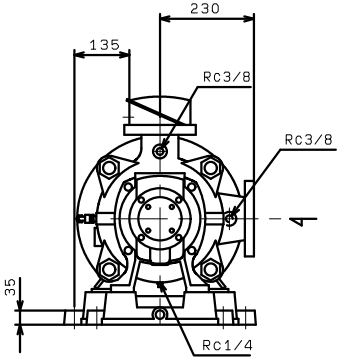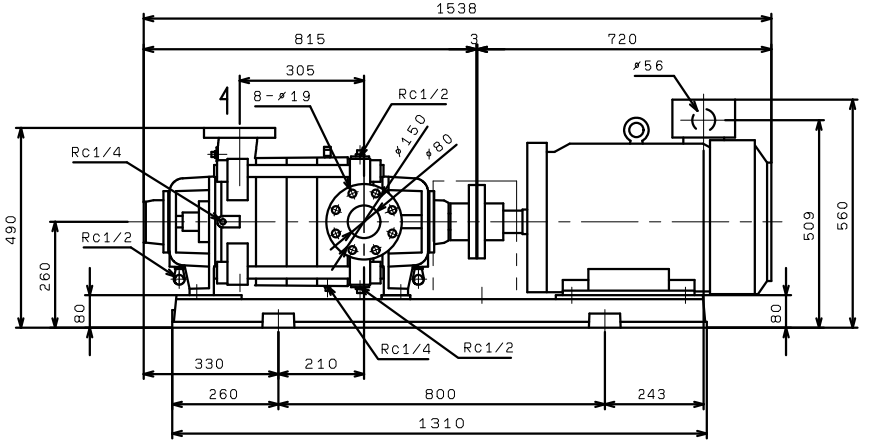
(VC91)