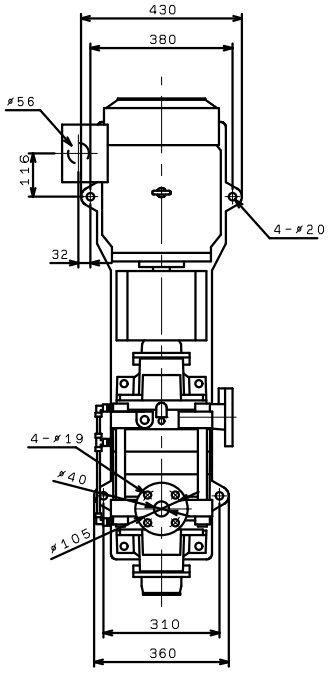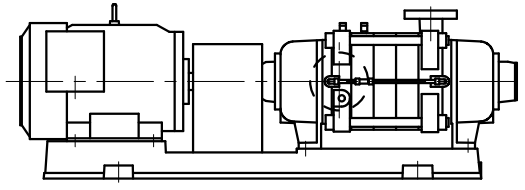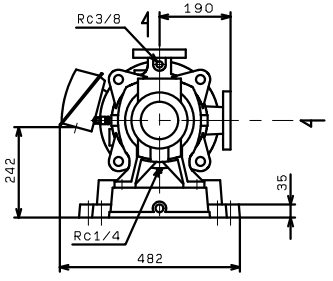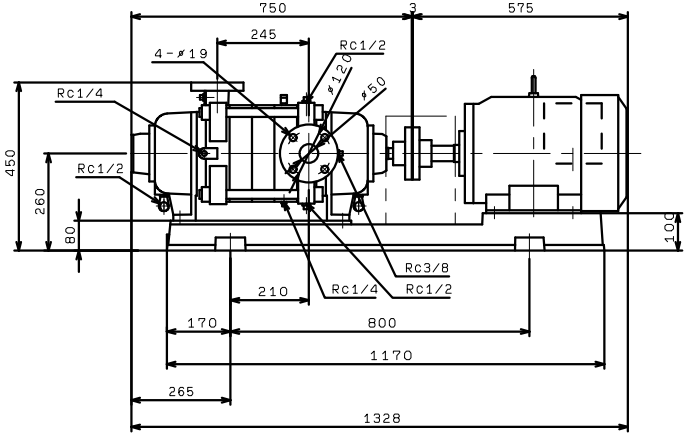K505GX4ME11
K506GX4ME11
K505GX4ME15
K506GX4ME15
(VC91)