GSP4-506-CE2.2
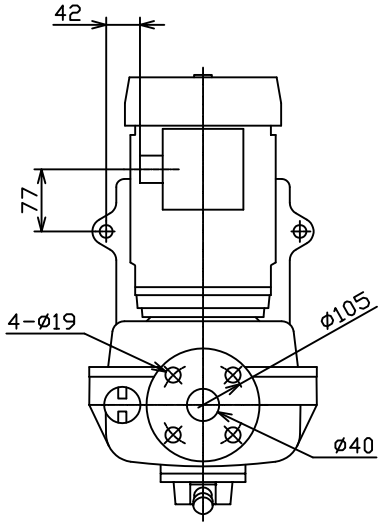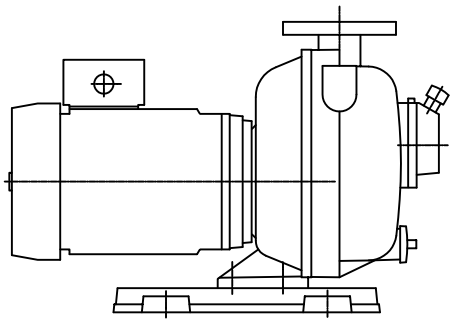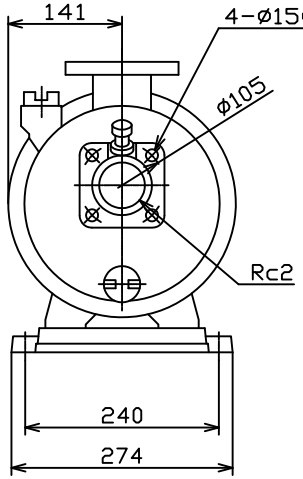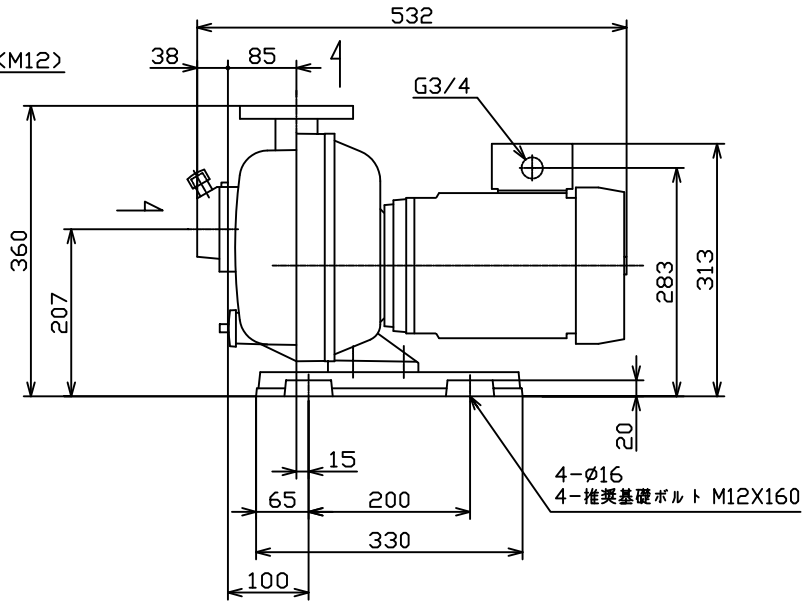
VC81