GS-405-MNO. 4

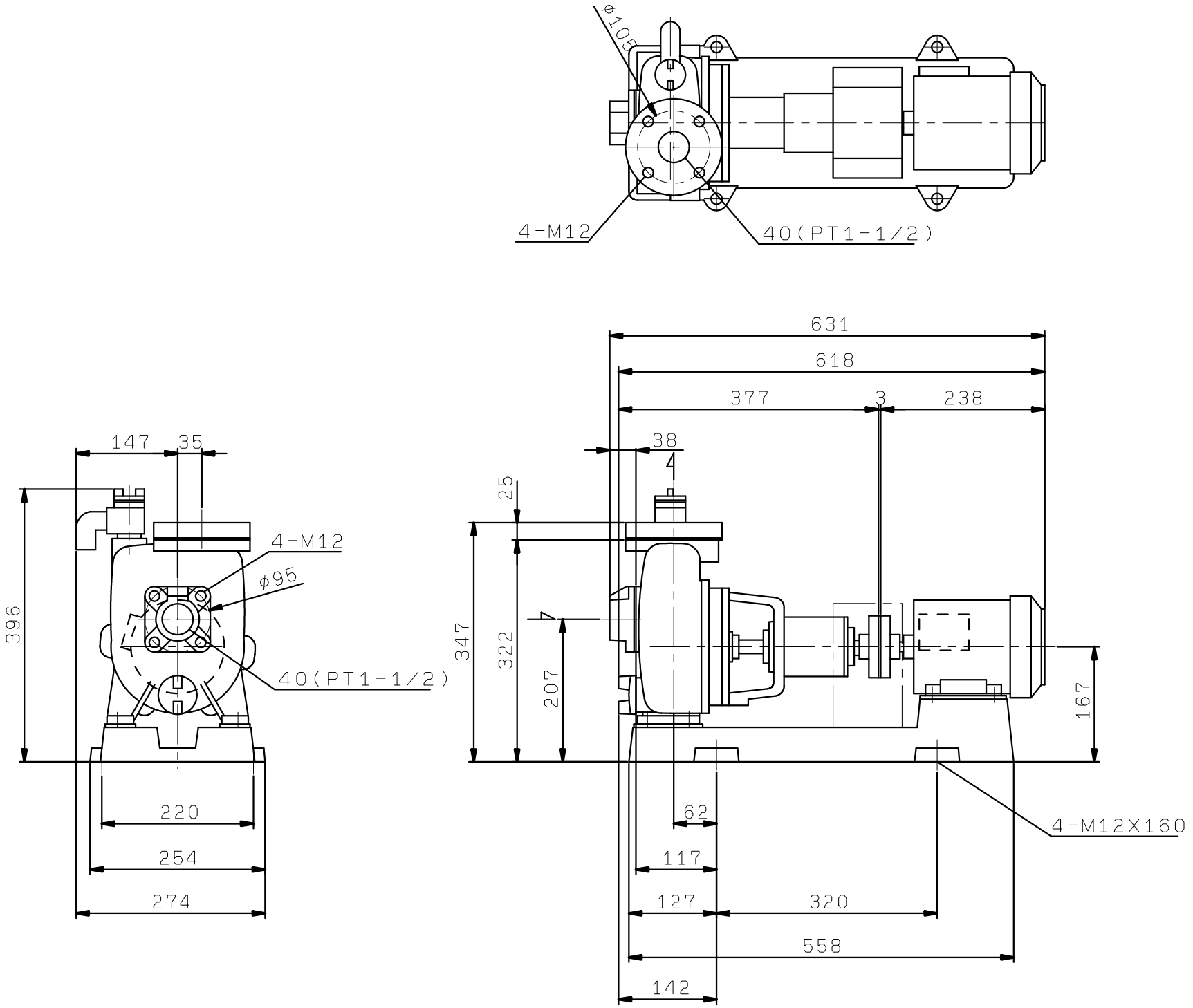
φ105
4-M12
40(PT1-1/2)
631
618
377
3
238
38
25
147
35
4-M12
φ95
396
40(PT1-1/2)
347
322
207
167
220
254
274
62
117
127
320
558
142
4-M12X160