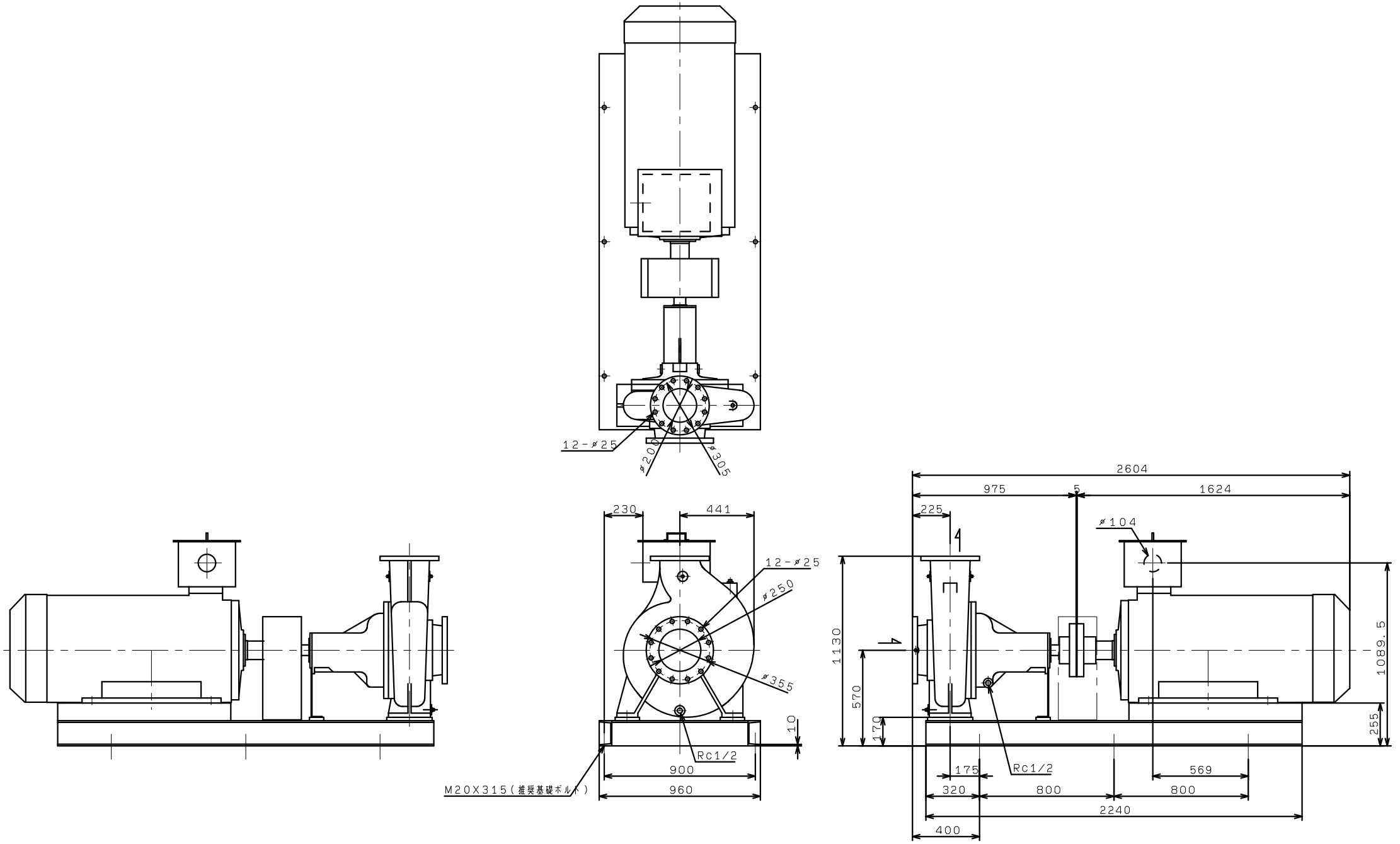GFQ2505G4ME250