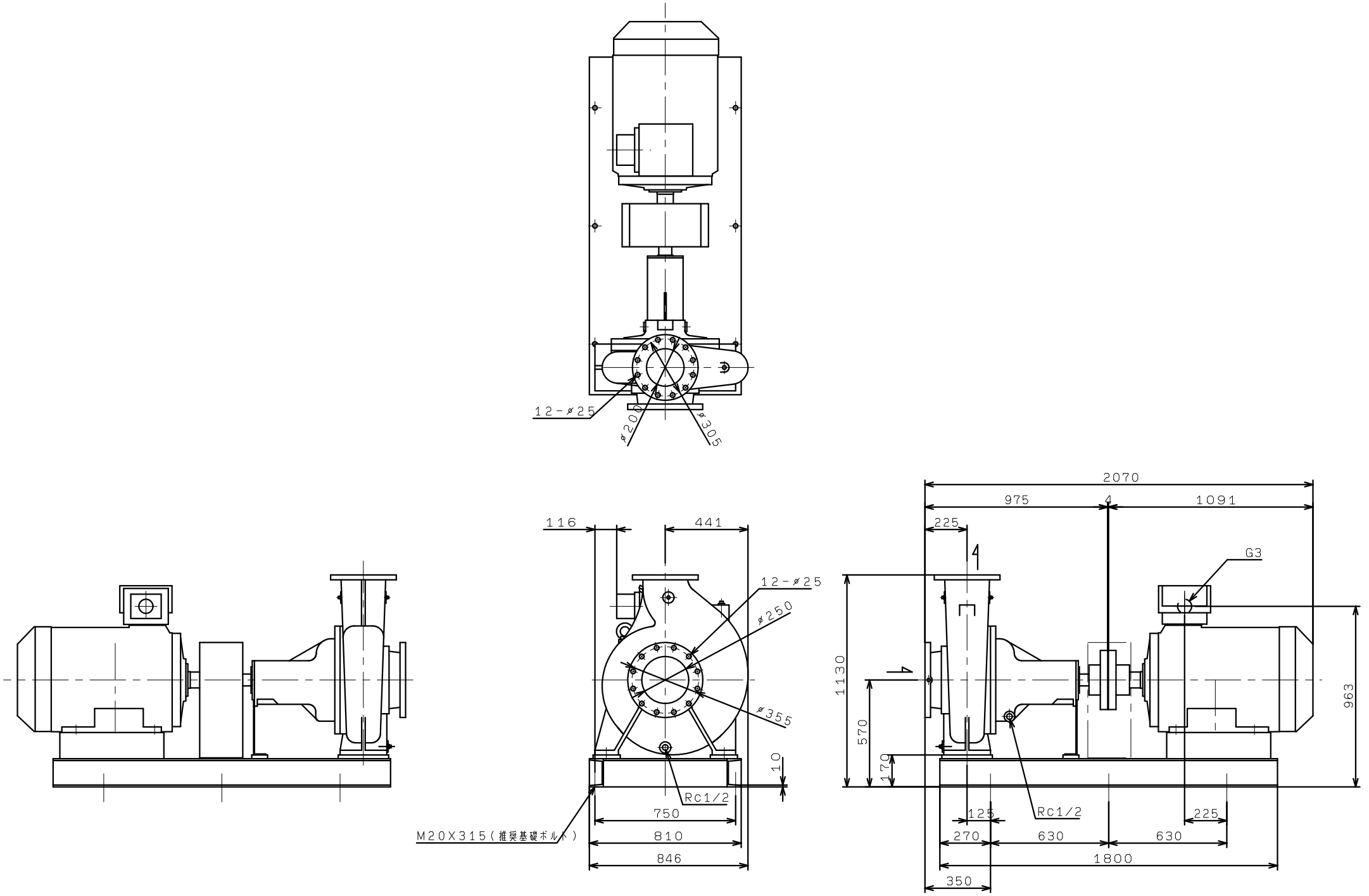GFQ2505G4ME160
(VC30)