GFQ2005G4ME110
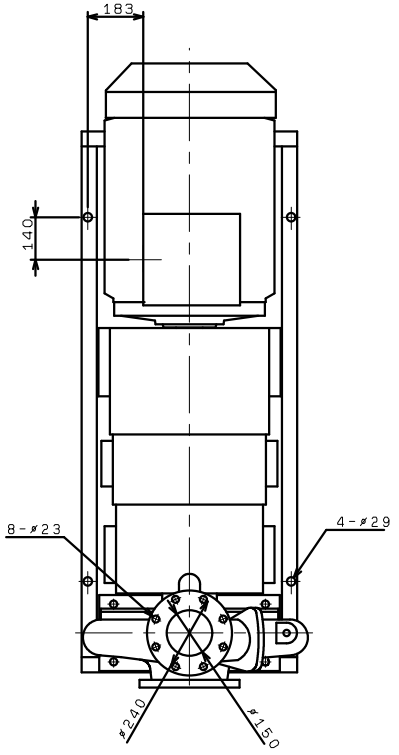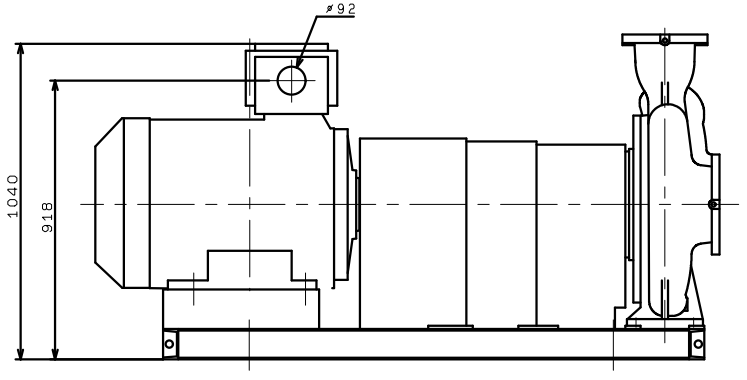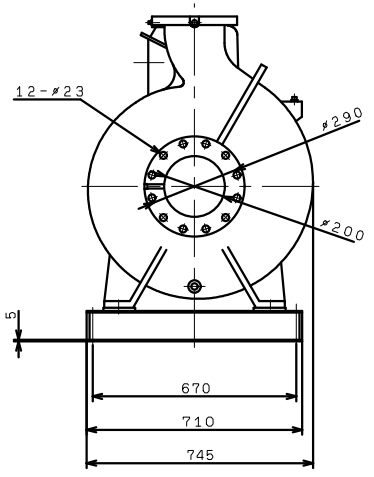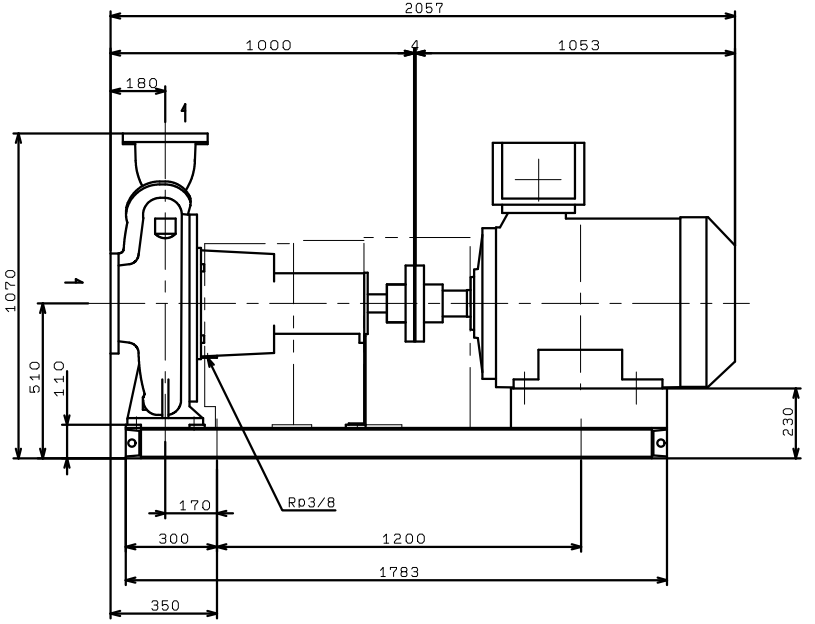
(VC86)