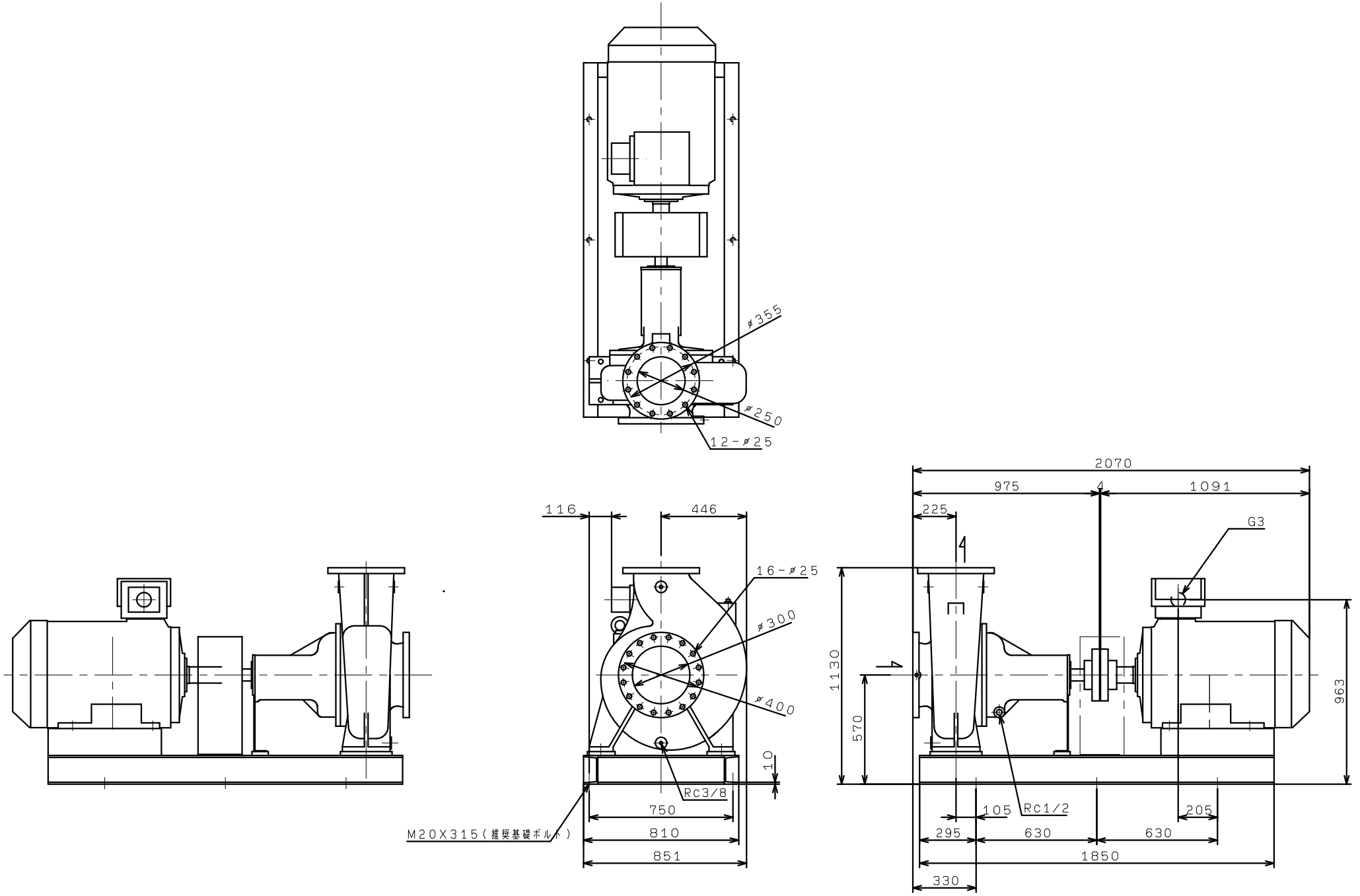GF03005G4ME160
GF03006G4ME160
(VC30)