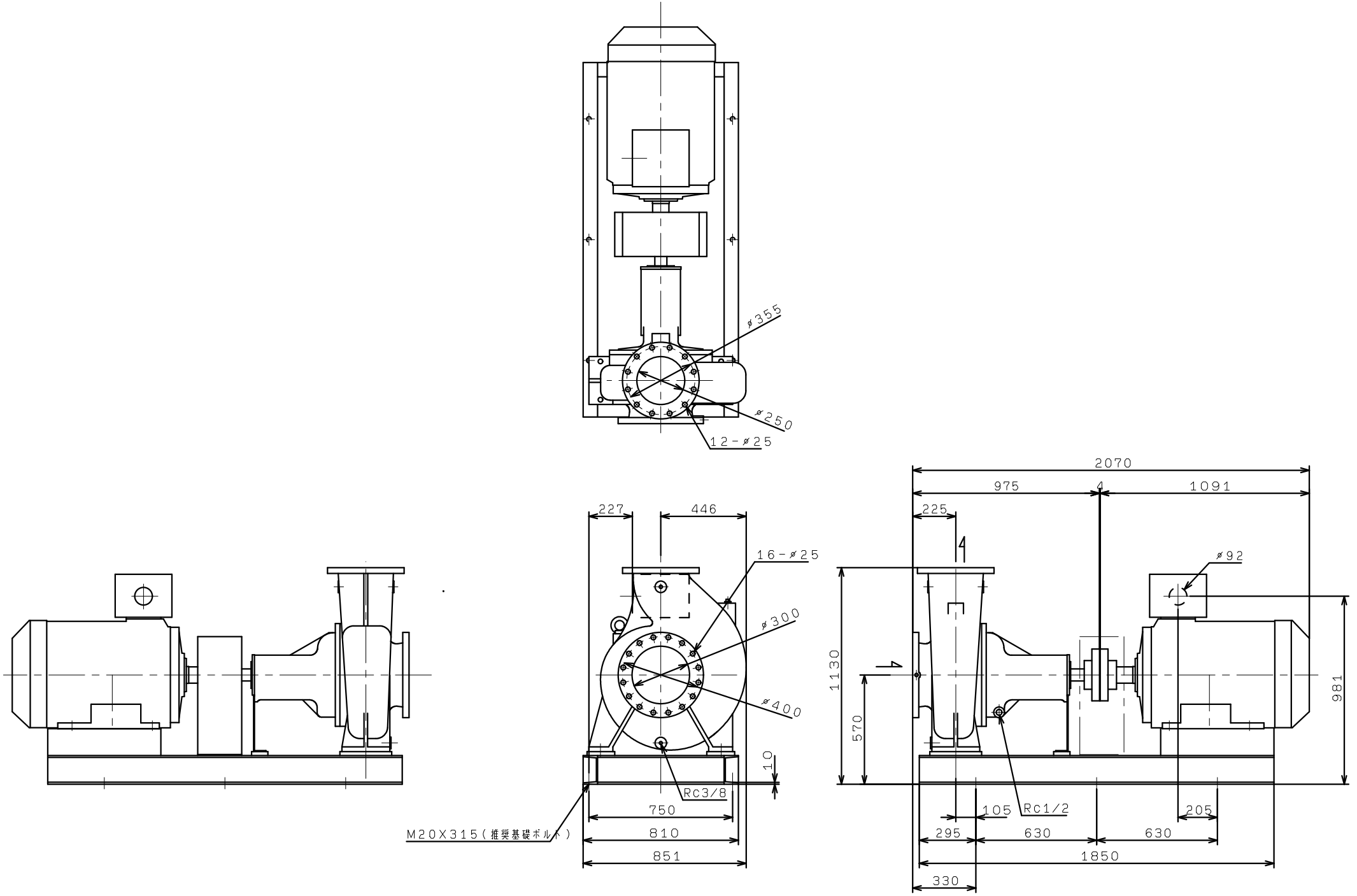GFO3005G4ME160
GFO3006G4ME160