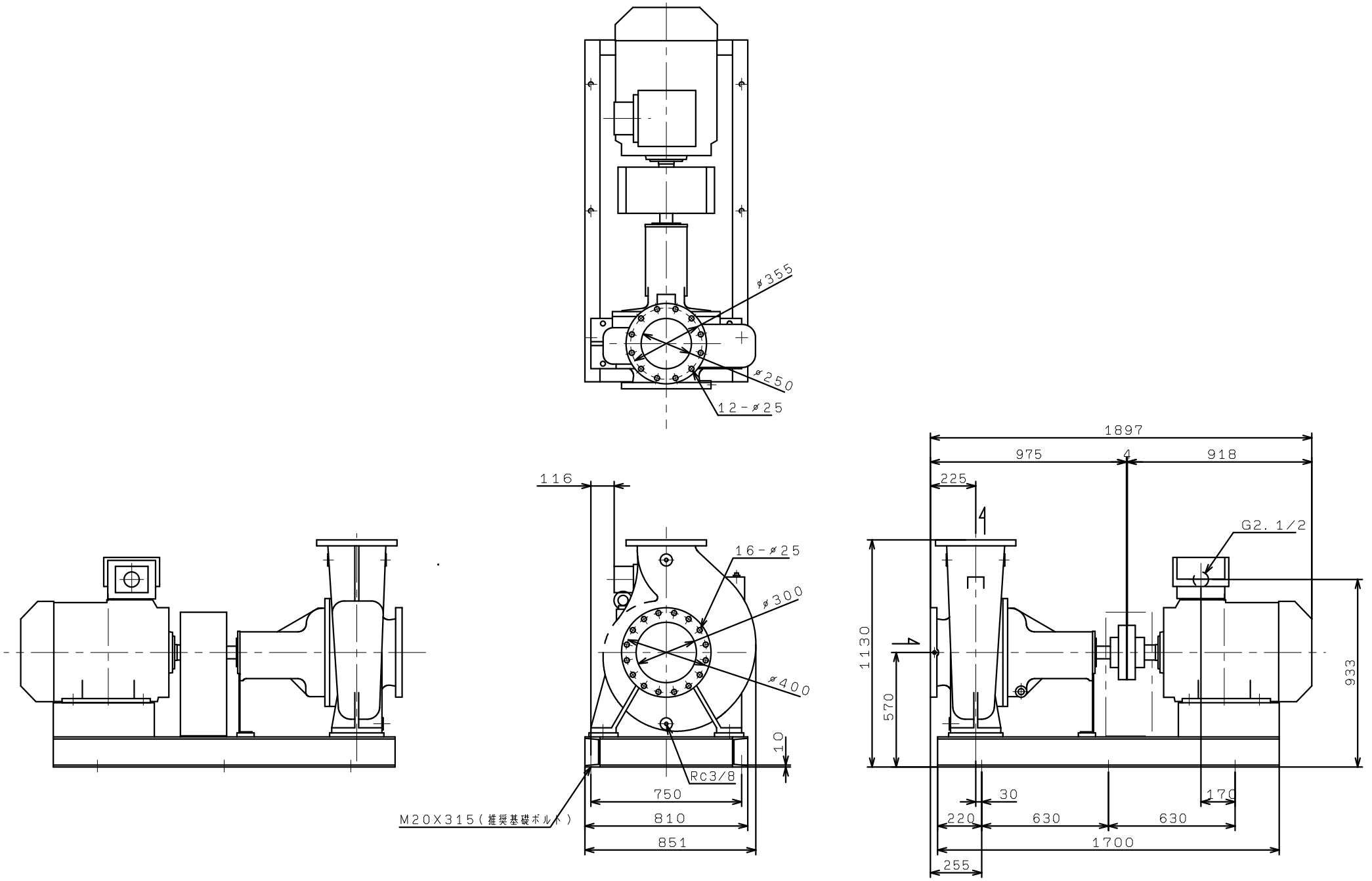GFO3005M4ME90
(VC30)