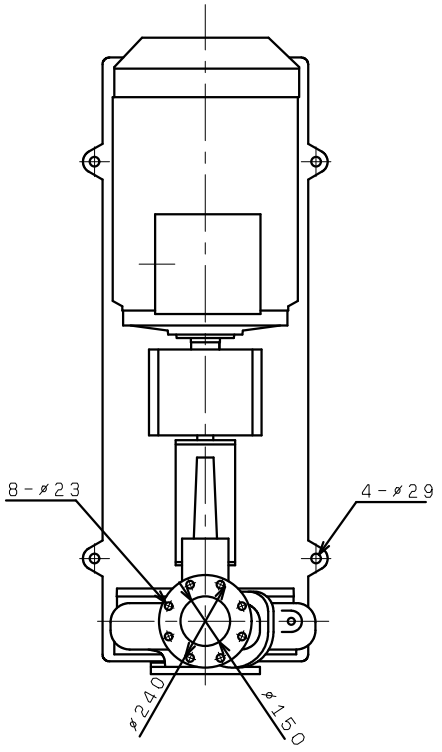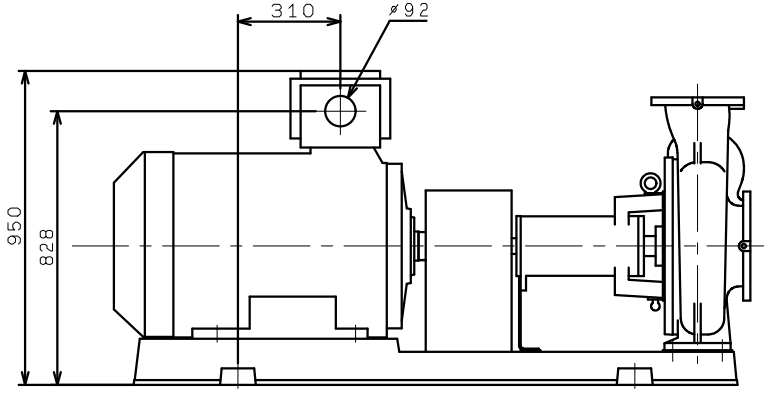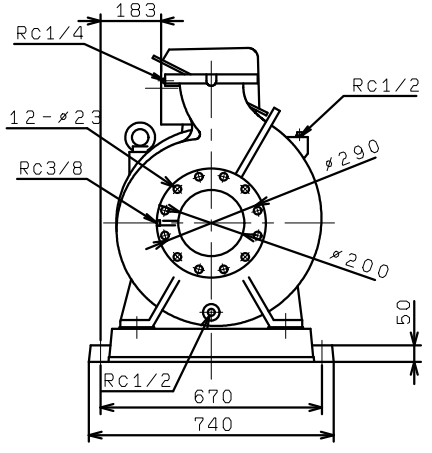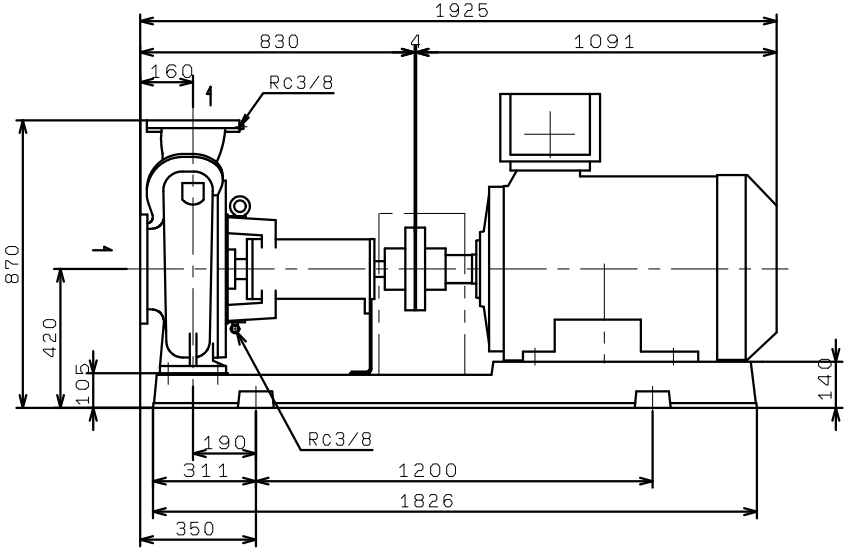GFO2006G4ME160