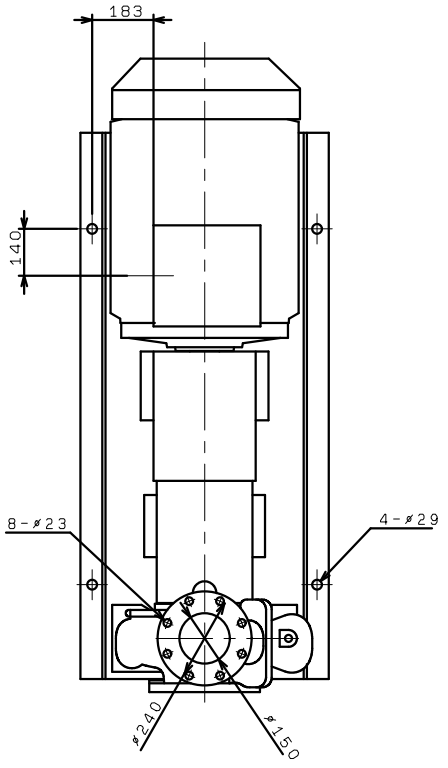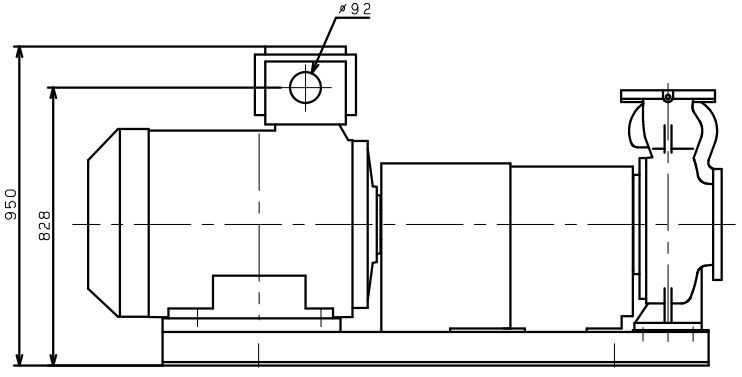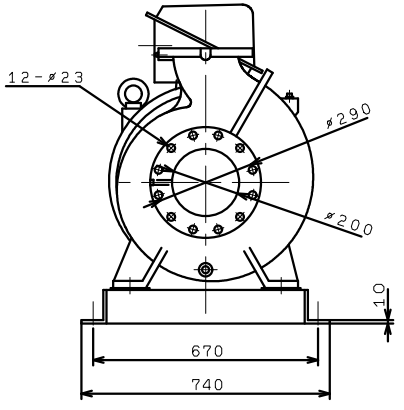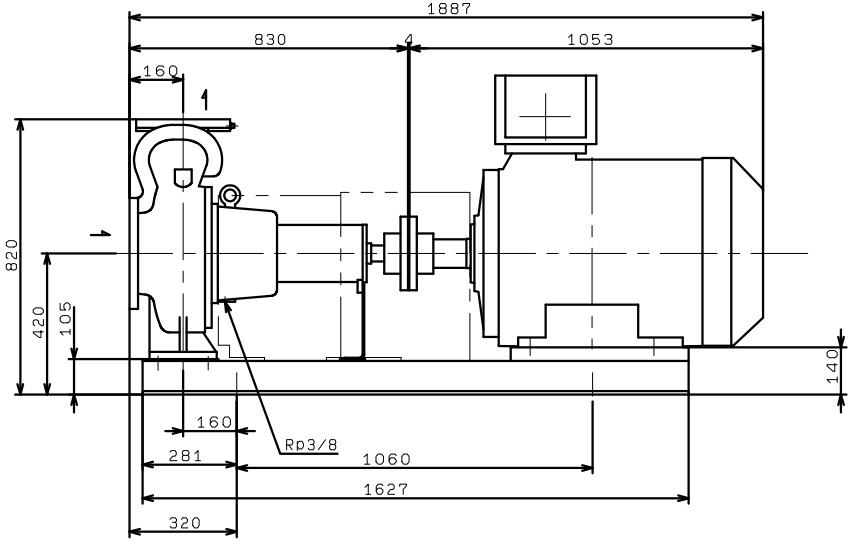GFM2006G4ME110
(VC86)