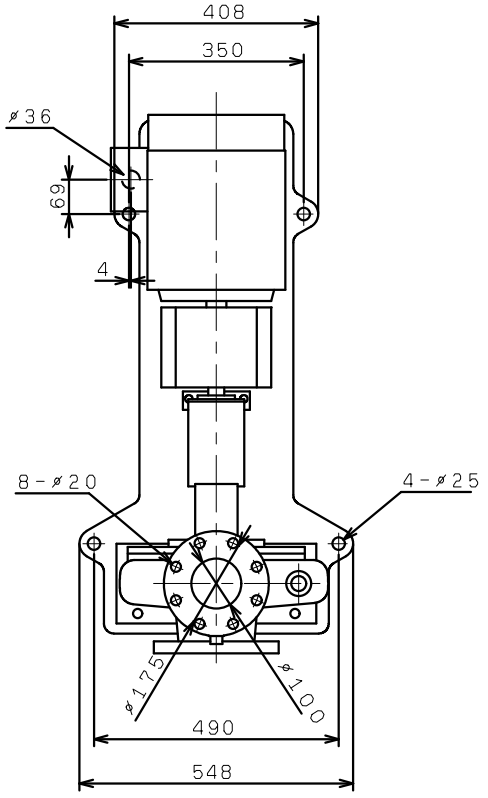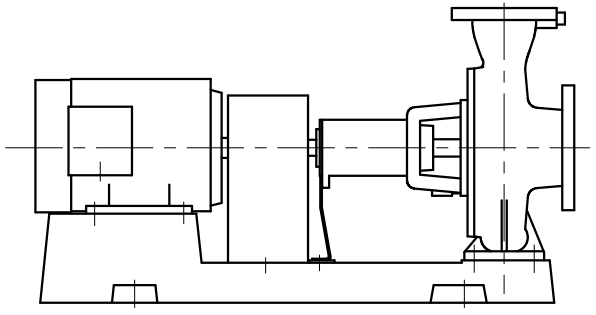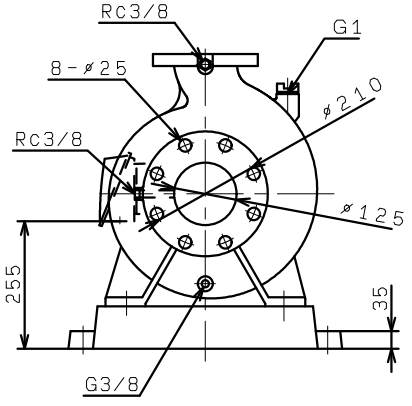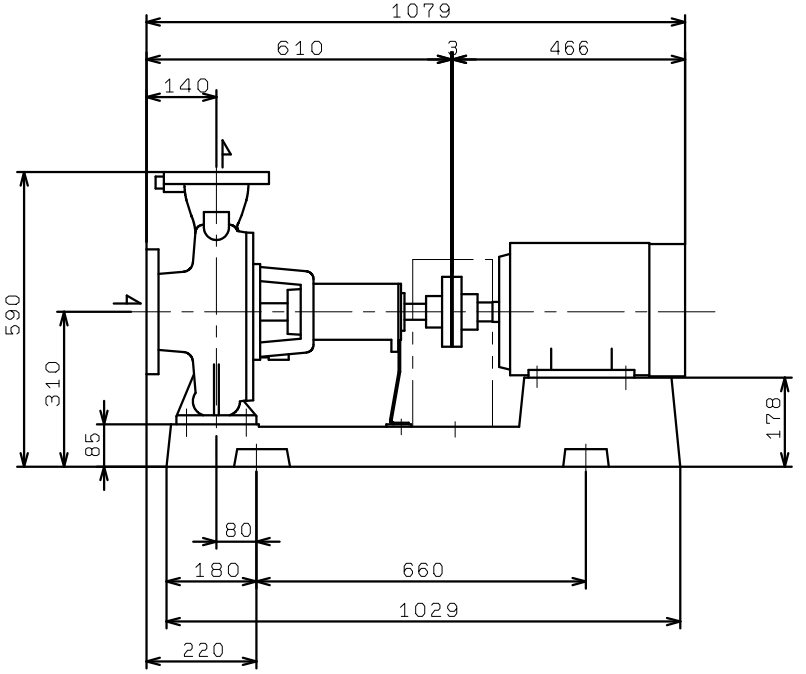GEZ1255-4ME7.5
(VC86)