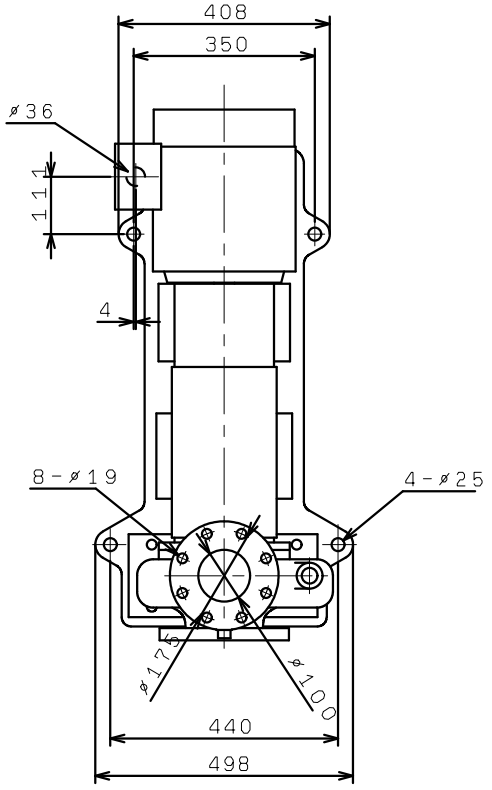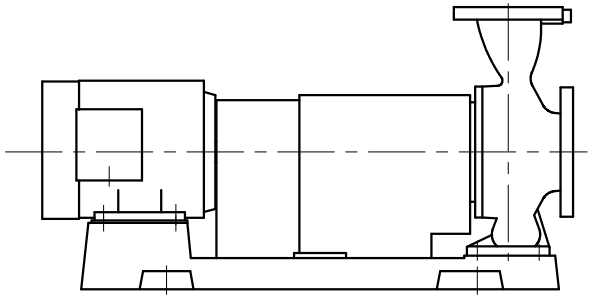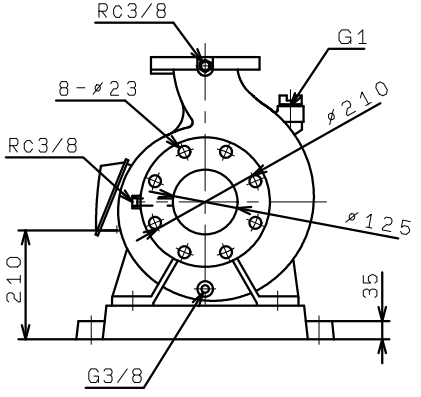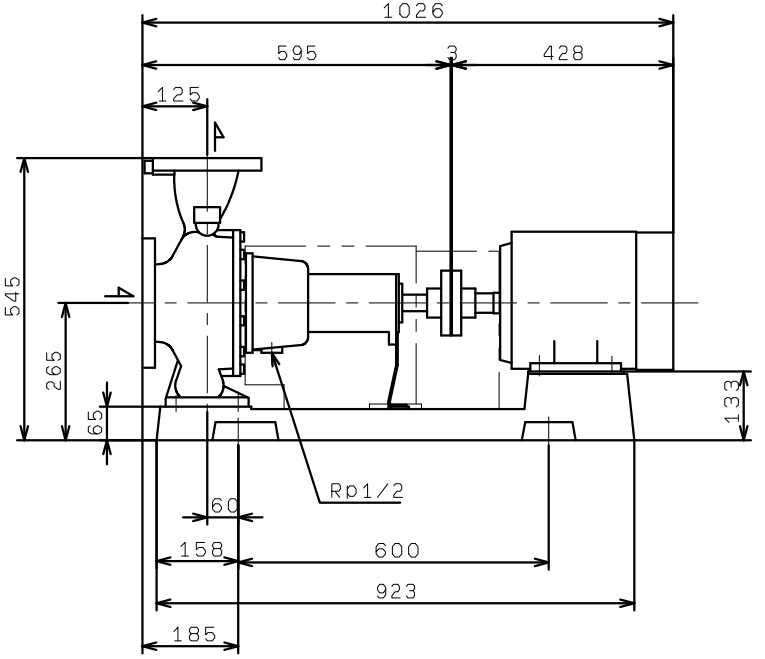GEZ1255-4ME5.5
(VC86)