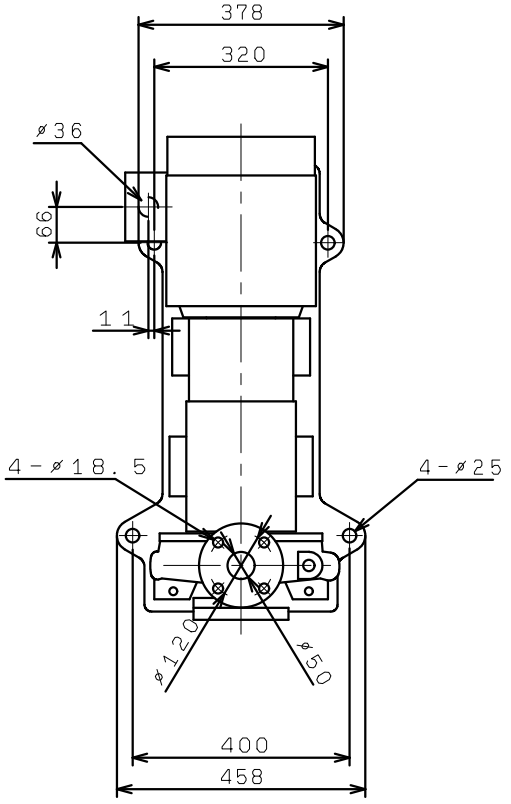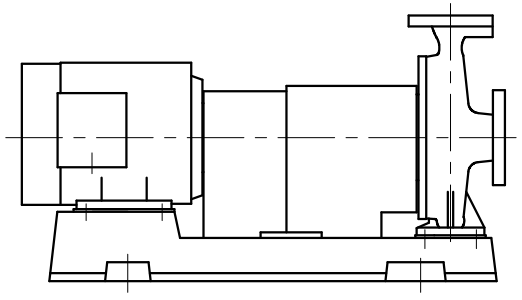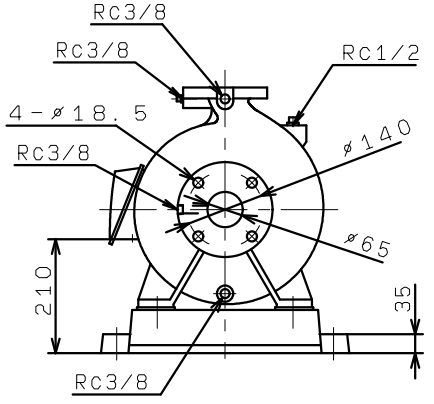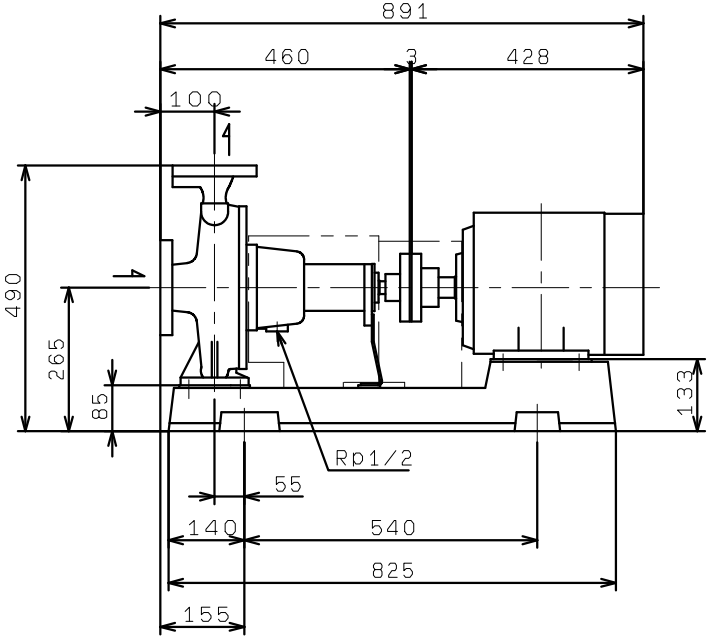GES656M4ME5.5
(VC86)