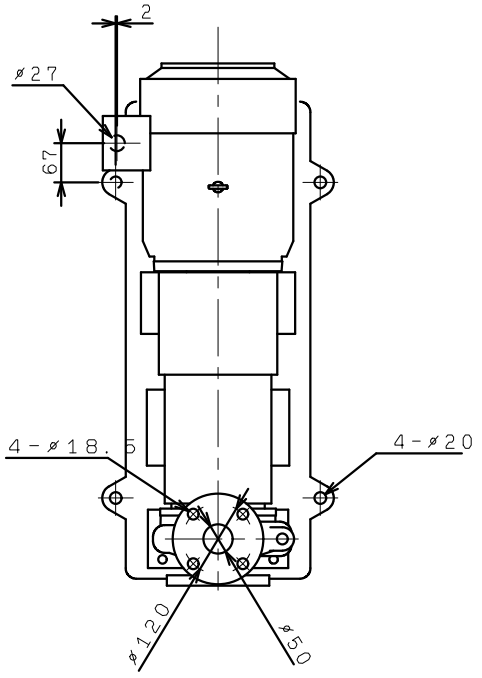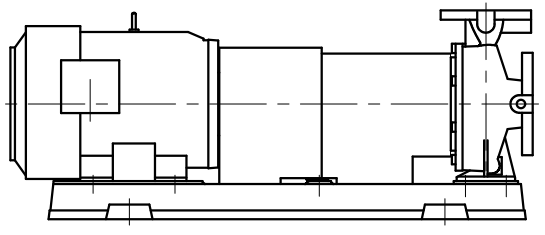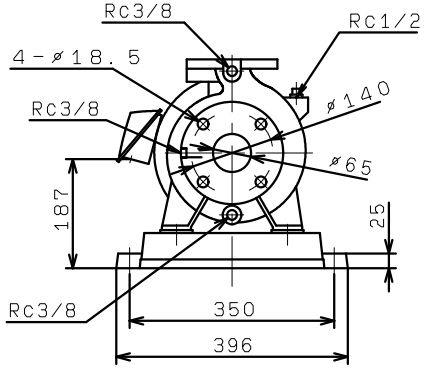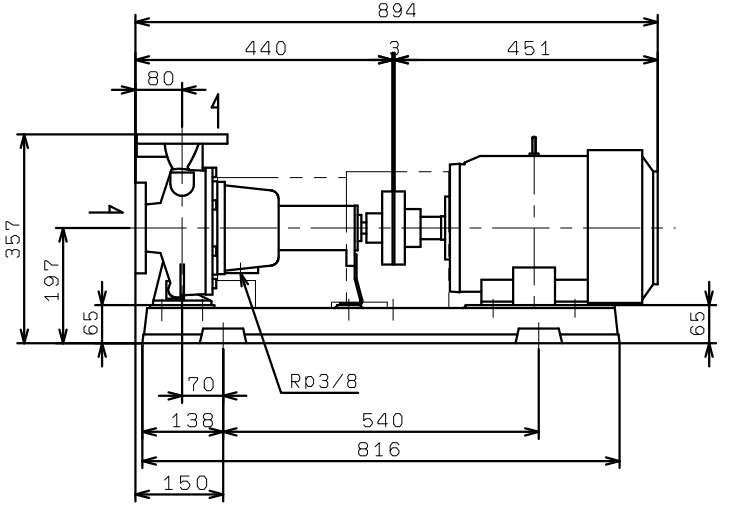GES656M2ME5.5
GES656M2ME7.5
(VC86)