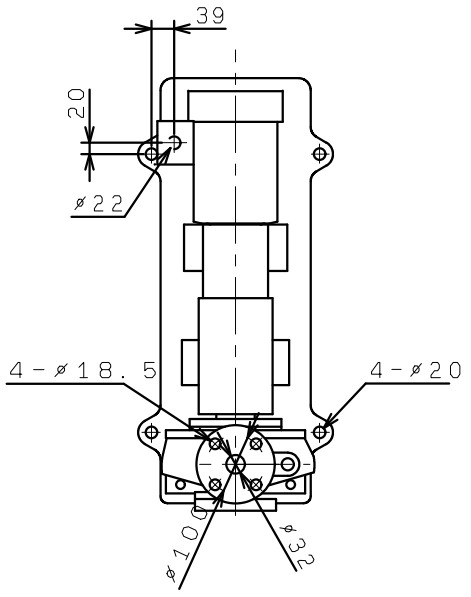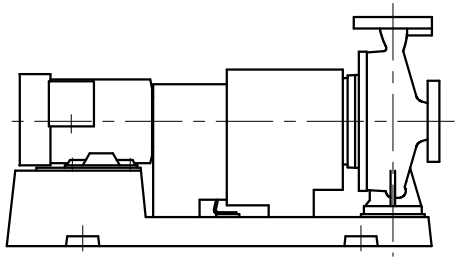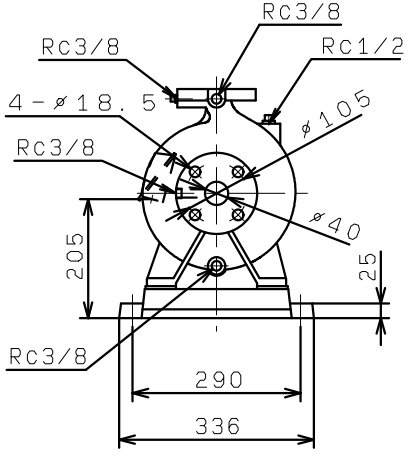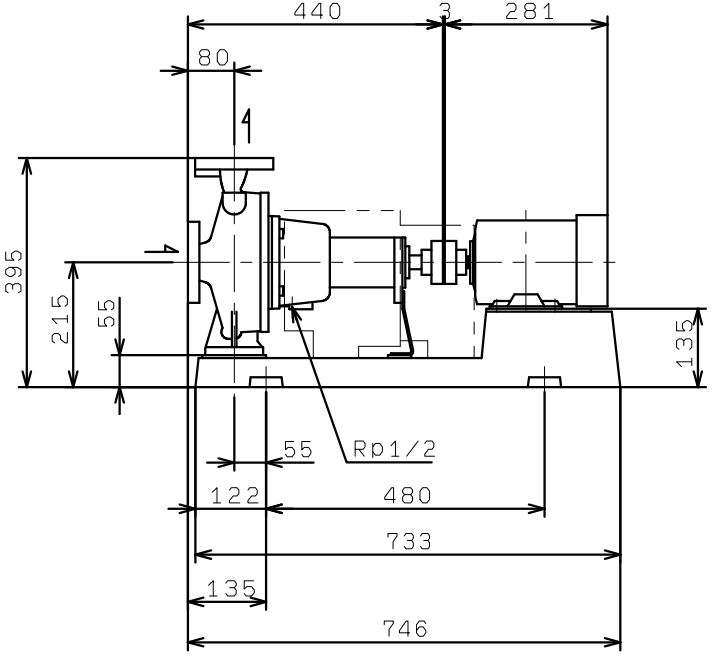GES405M4ME0.75
GES406M4ME0.75
(VC86)