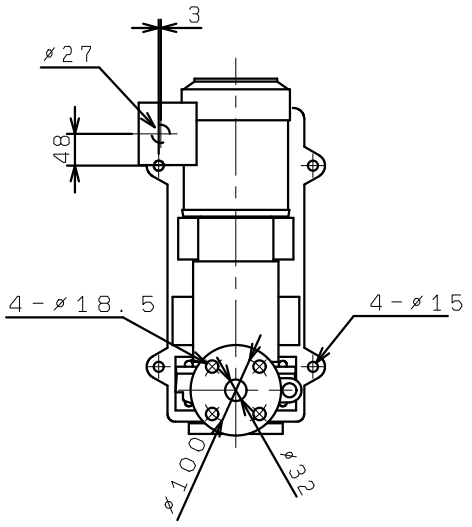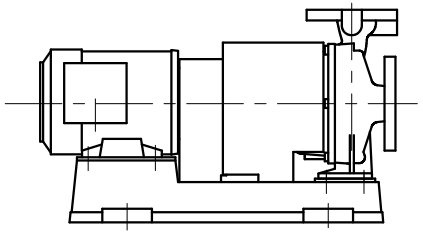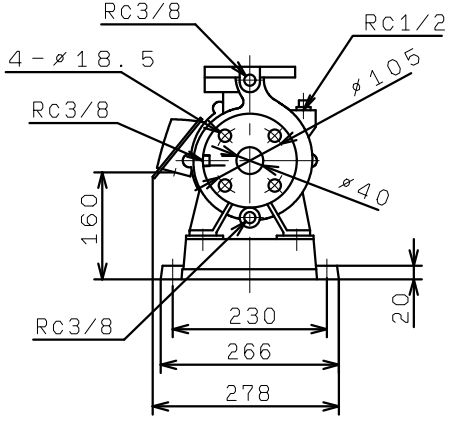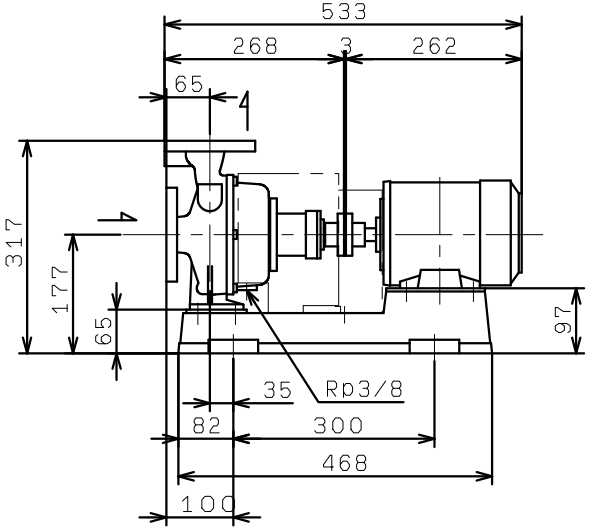GES405M2ME0.75
(VC86)