GE01505M4ME37
GE01505G4ME37

GE01505M4ME45
GE01505G4ME45
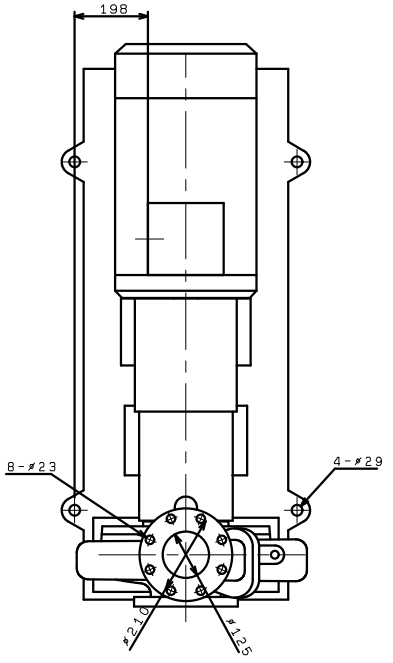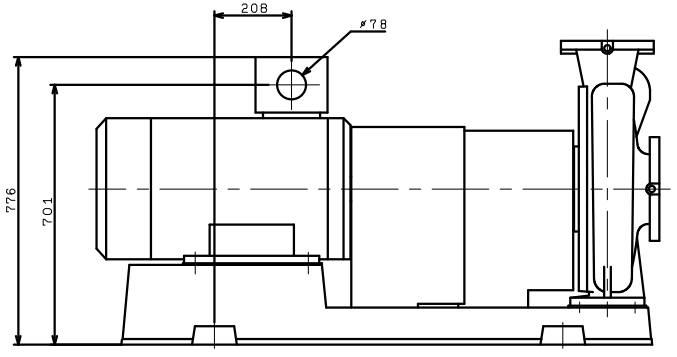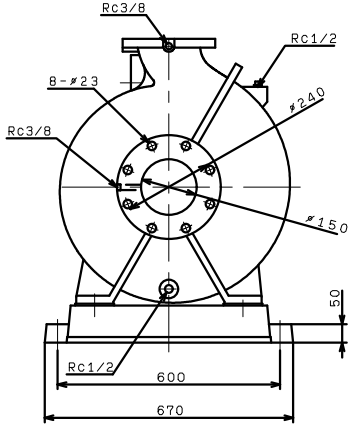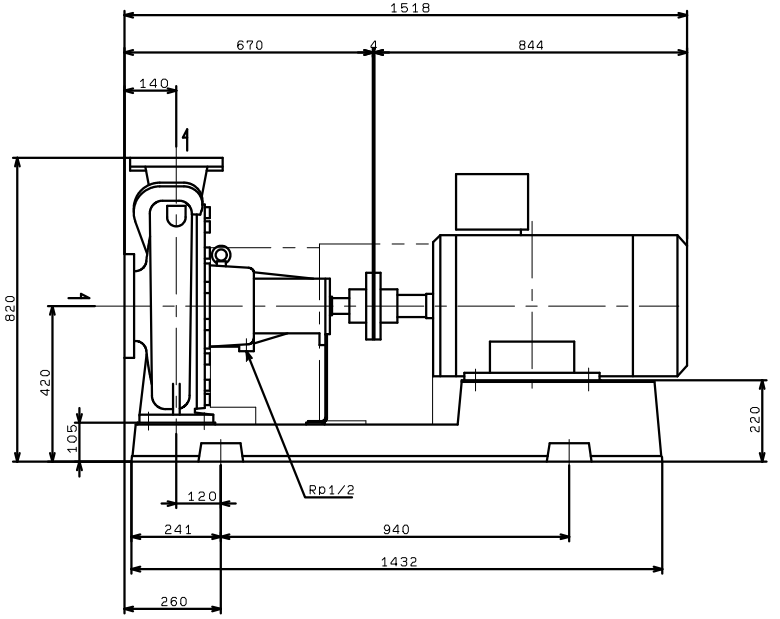
(VC86)