GEN656M4ME1.5
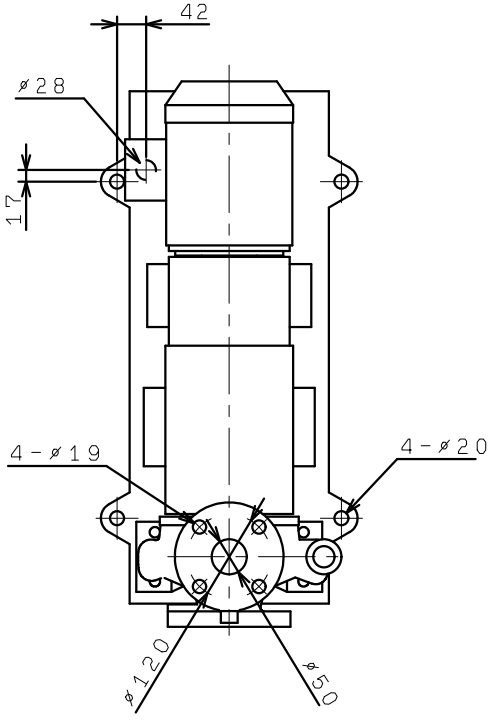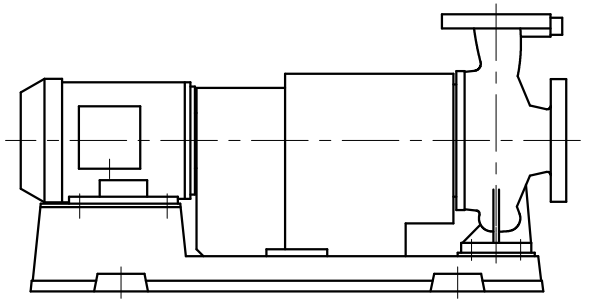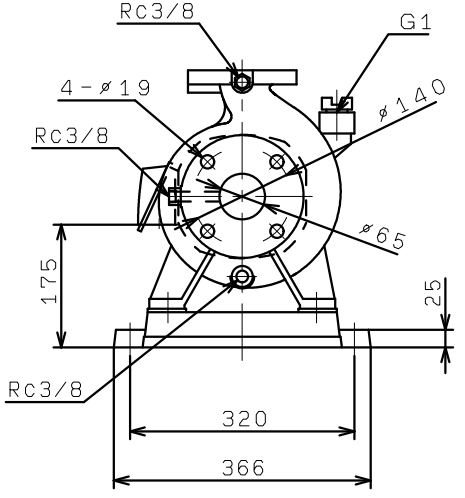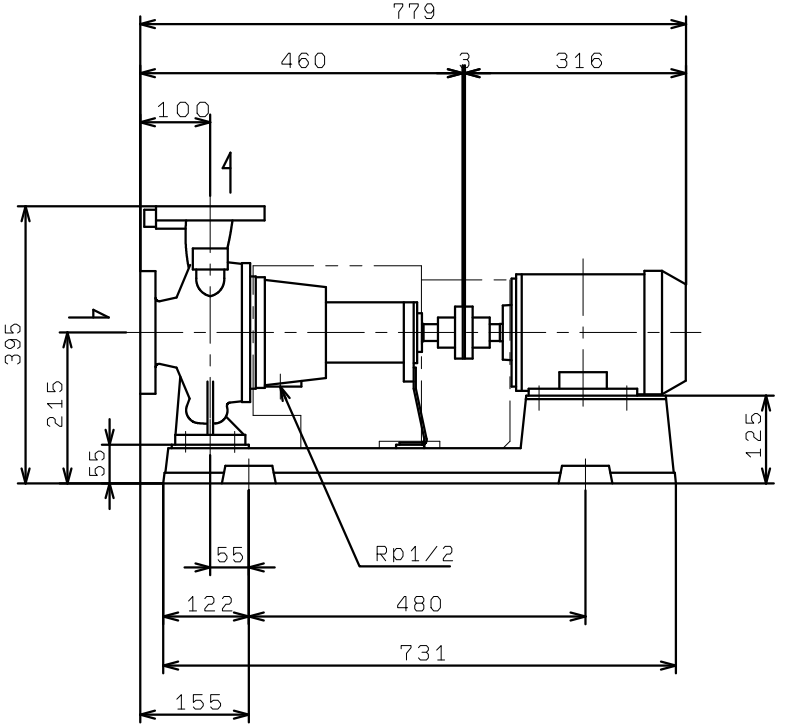
(VC86)