GEN655M4ME0.75
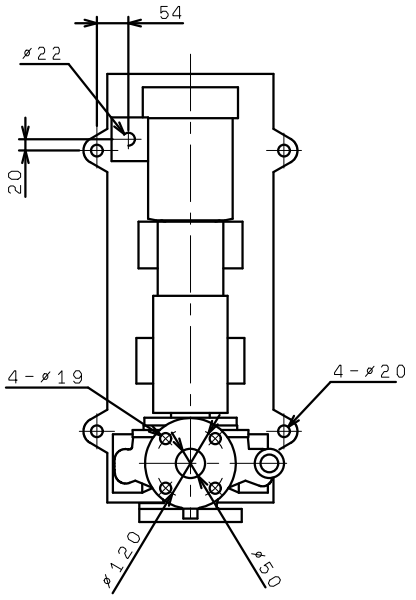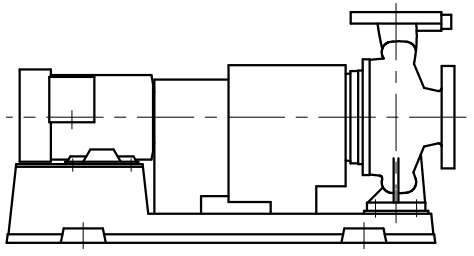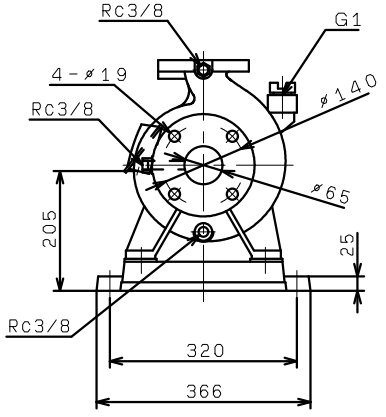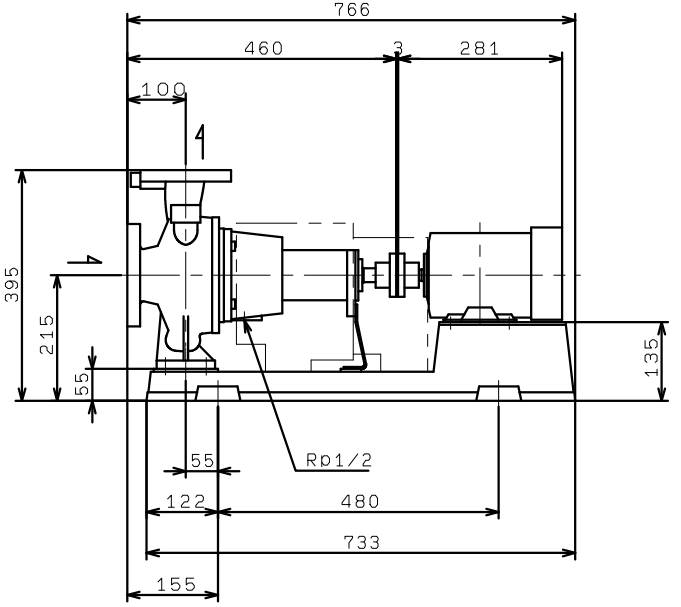
(VC86)