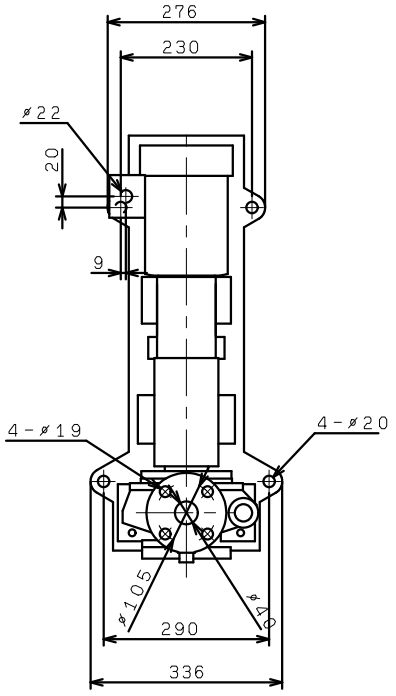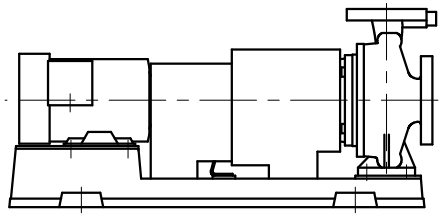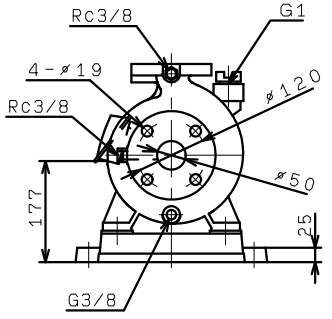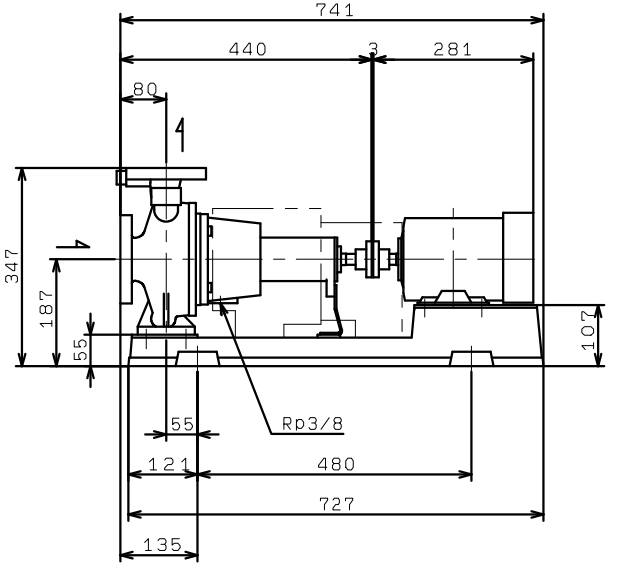GEN506M4ME0.75
(VC86)