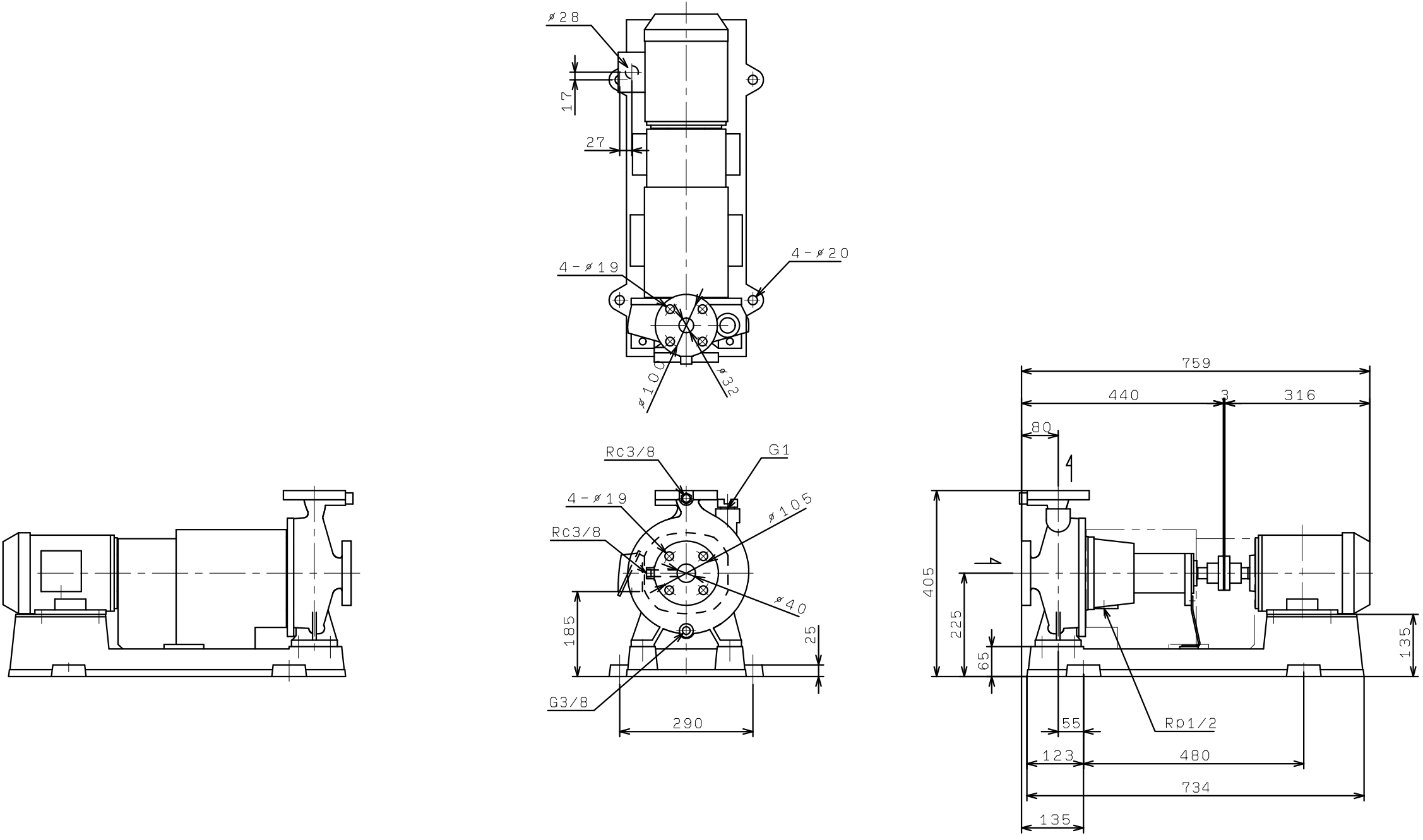GEN406M4ME1.5
(VC86)