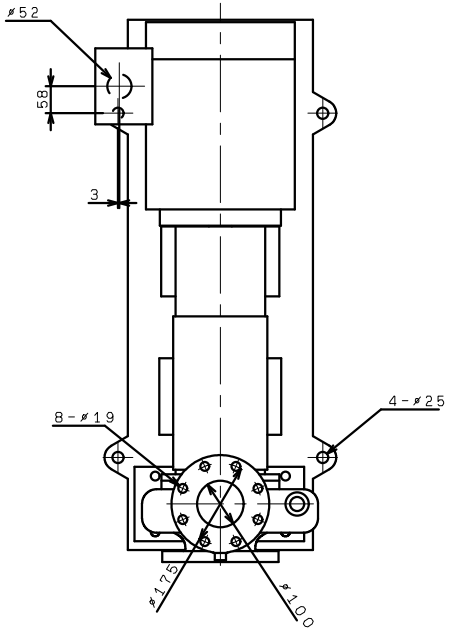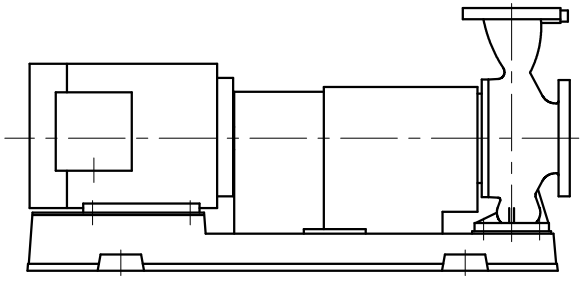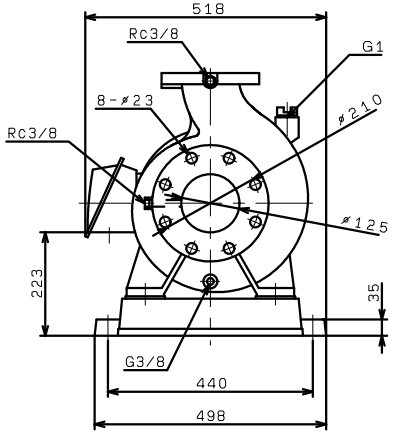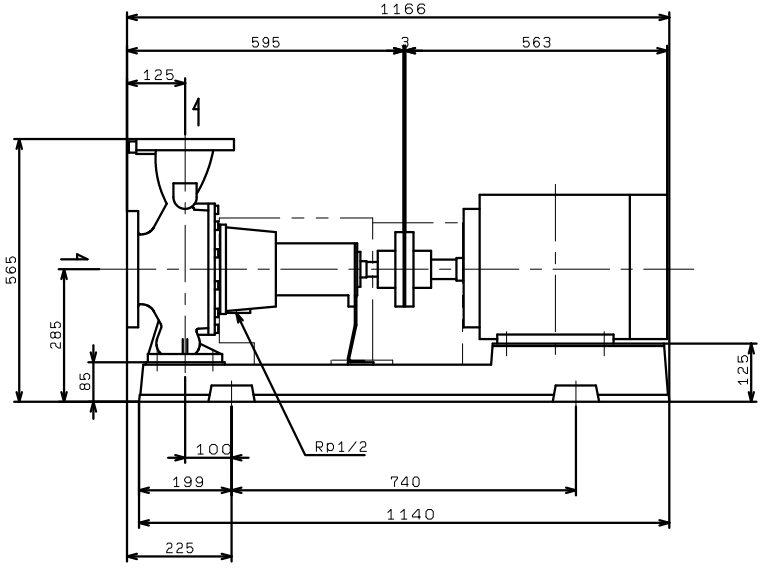GEN1256M4ME11
(VC86)