GEL805M4ME5.5
GEL805G4ME5.5
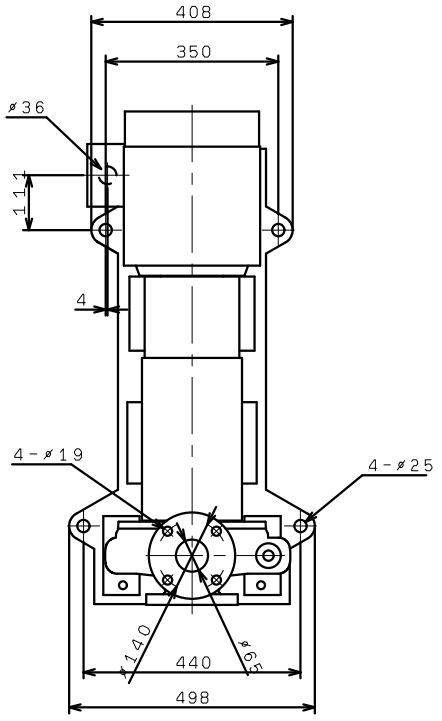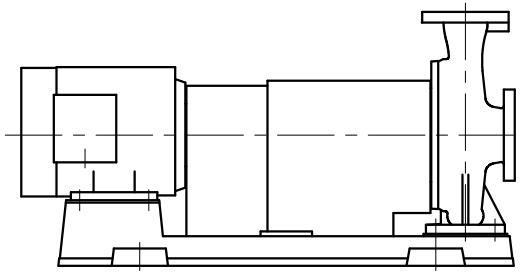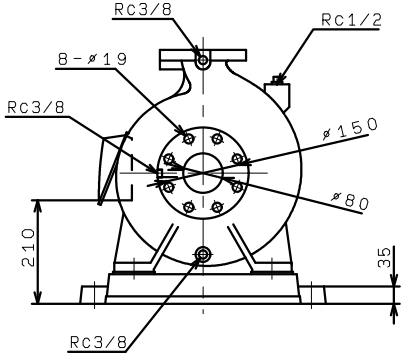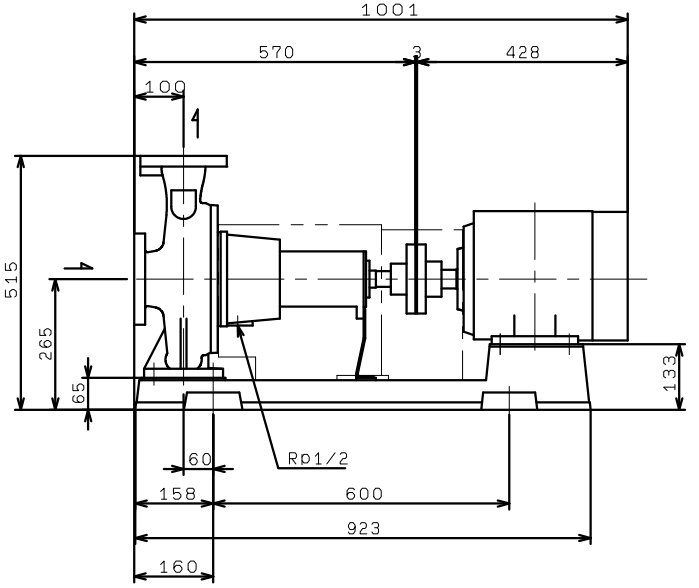
(VC86)