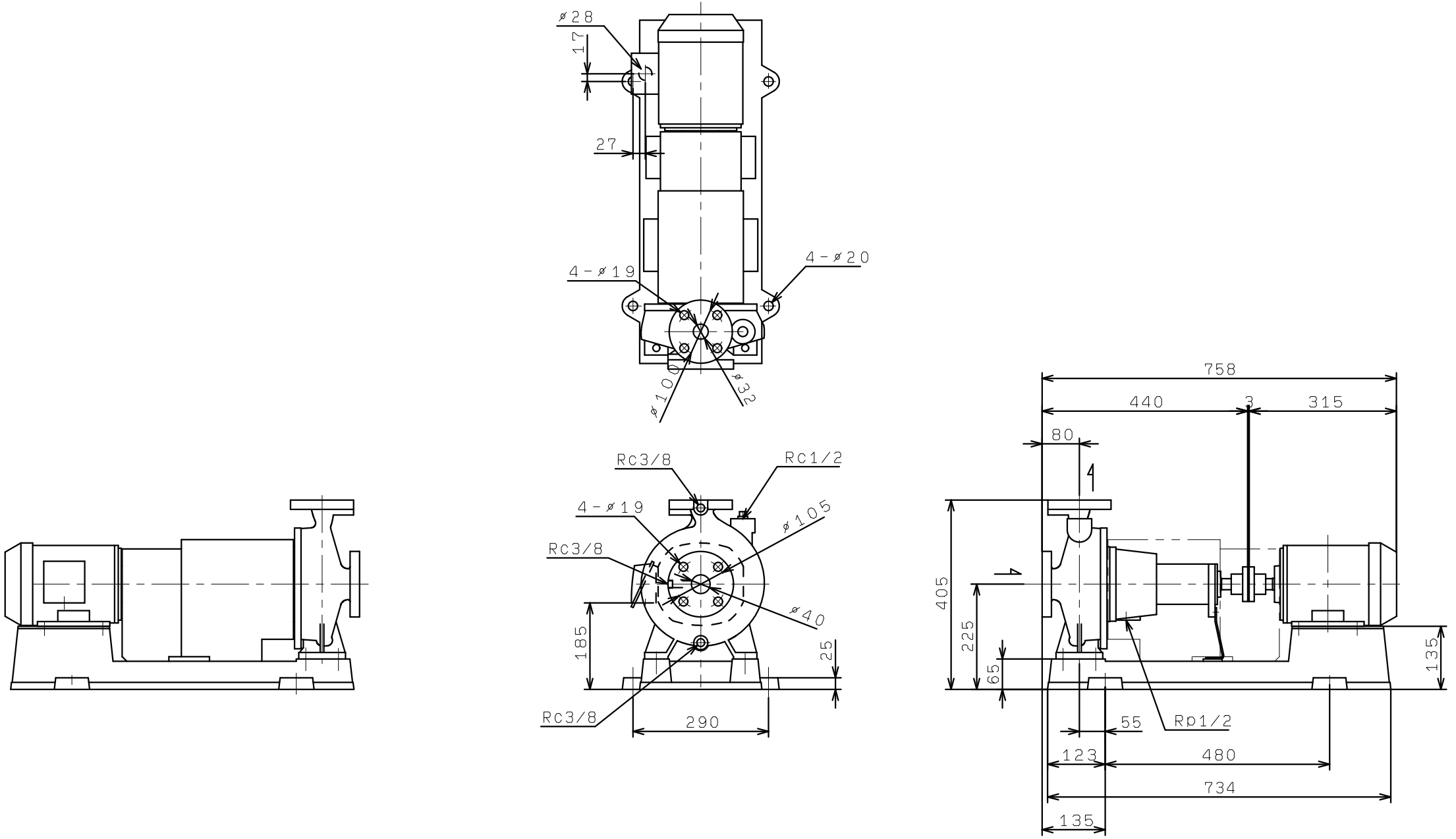GEK406M4ME1.5
GEK406G4ME1.5
(VC86)