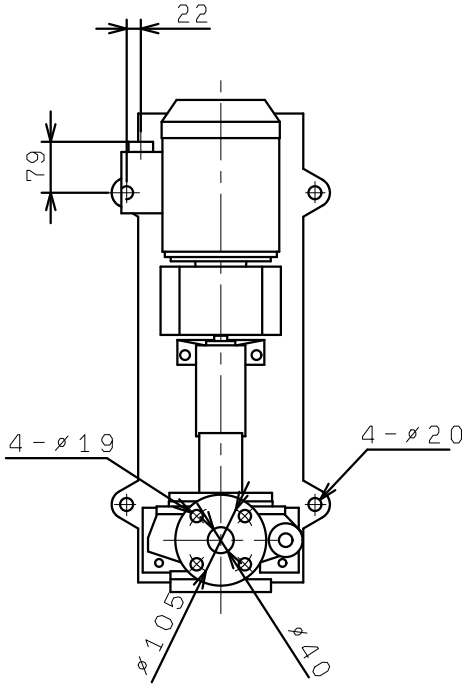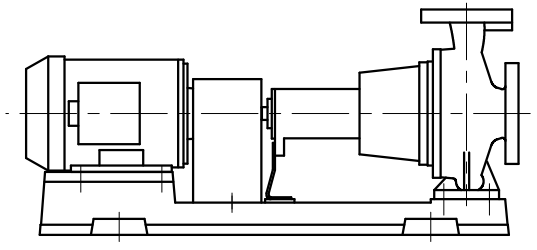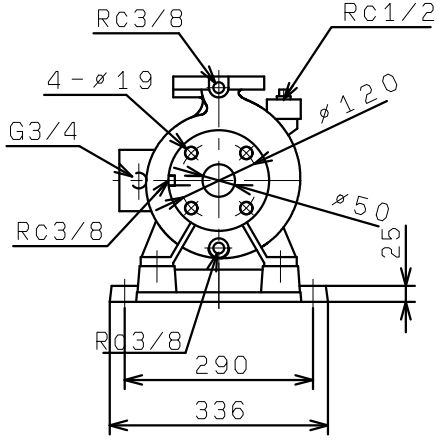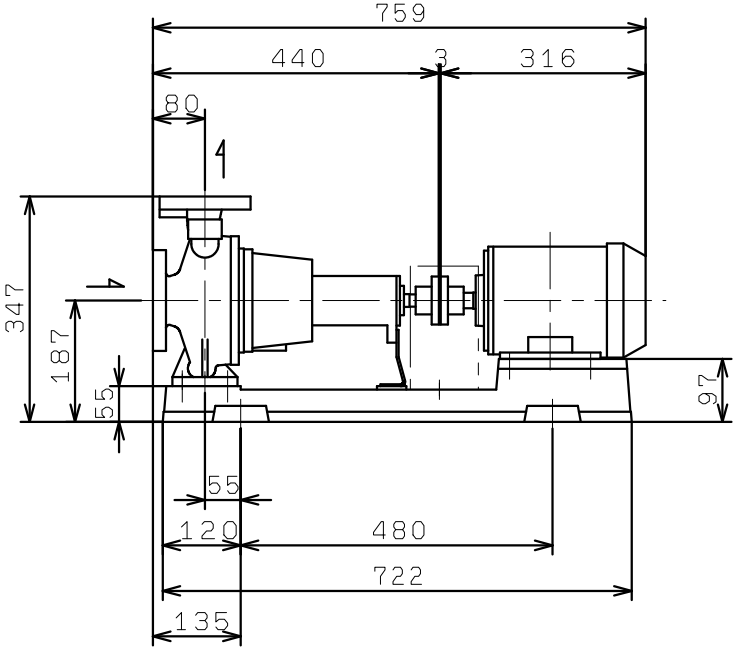GEJ506M4ME1.5
(VC30,84)