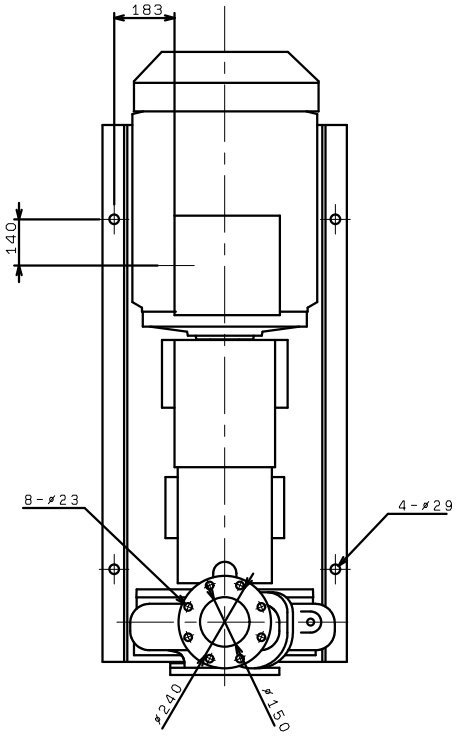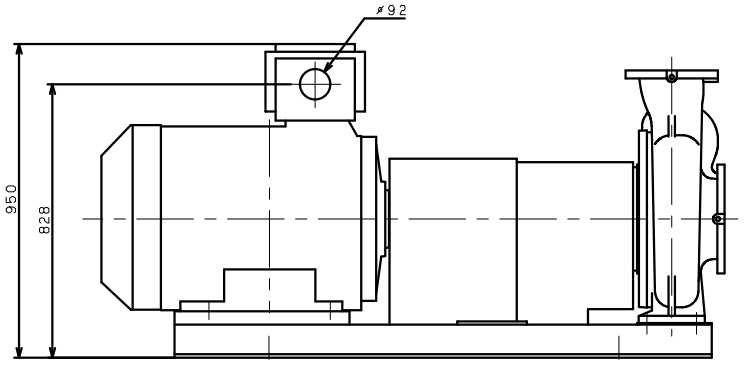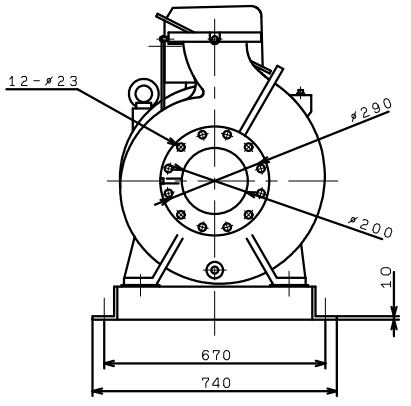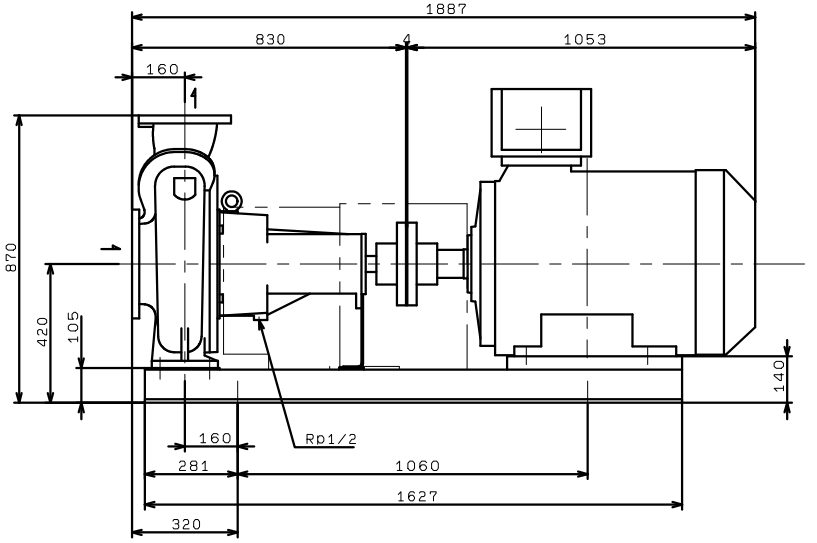GDO2006M4ME110
(VC86)