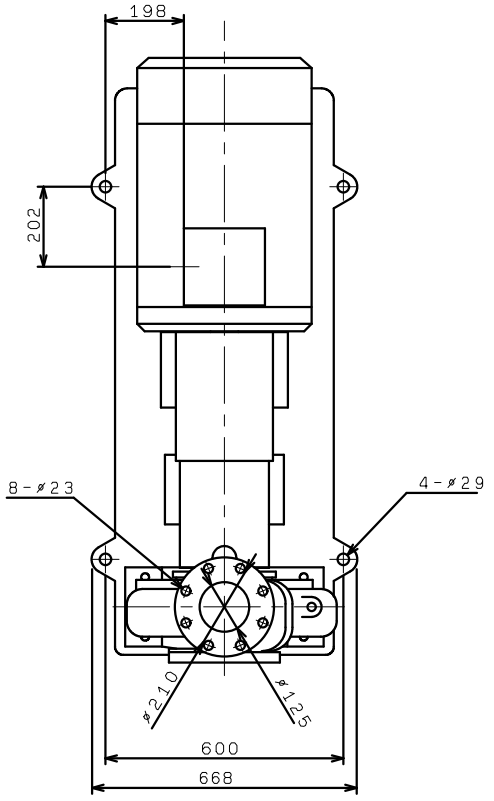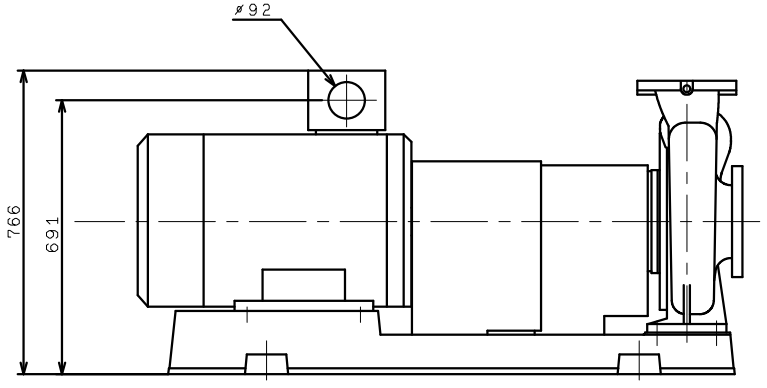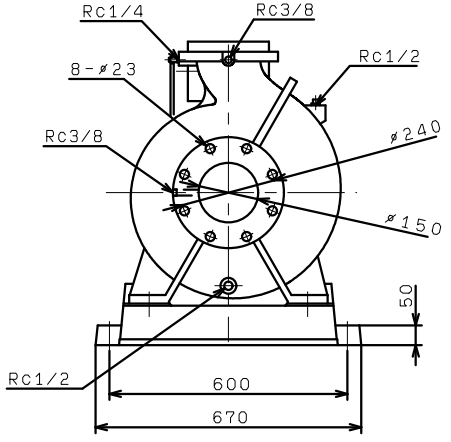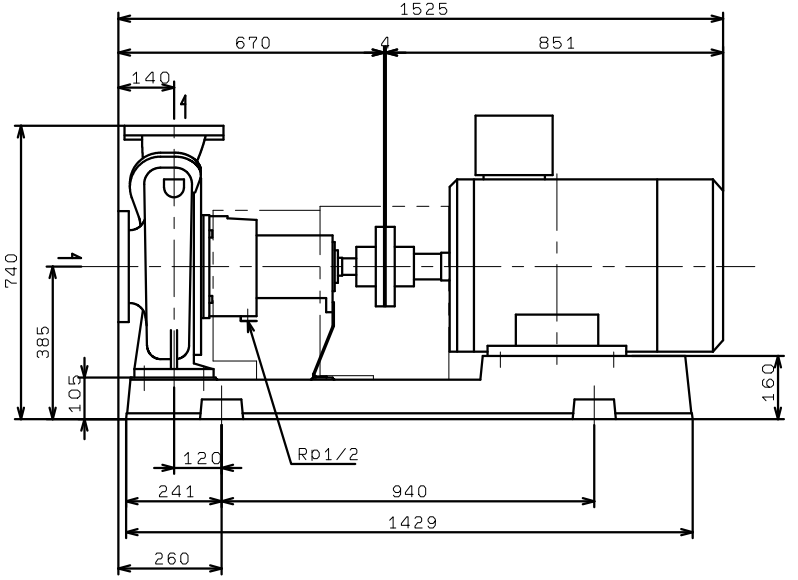GDM1506M4ME55
(VC86)