GDM1006M4ME15
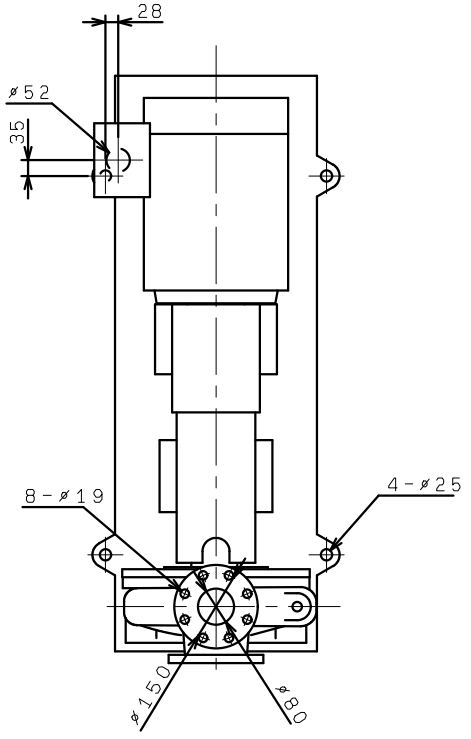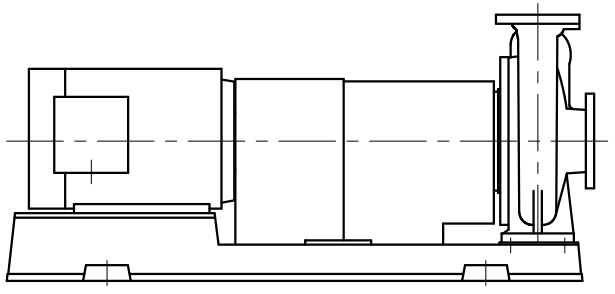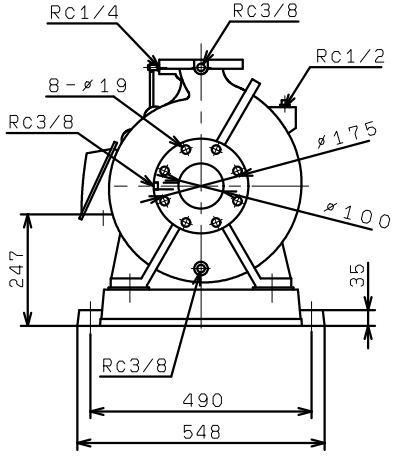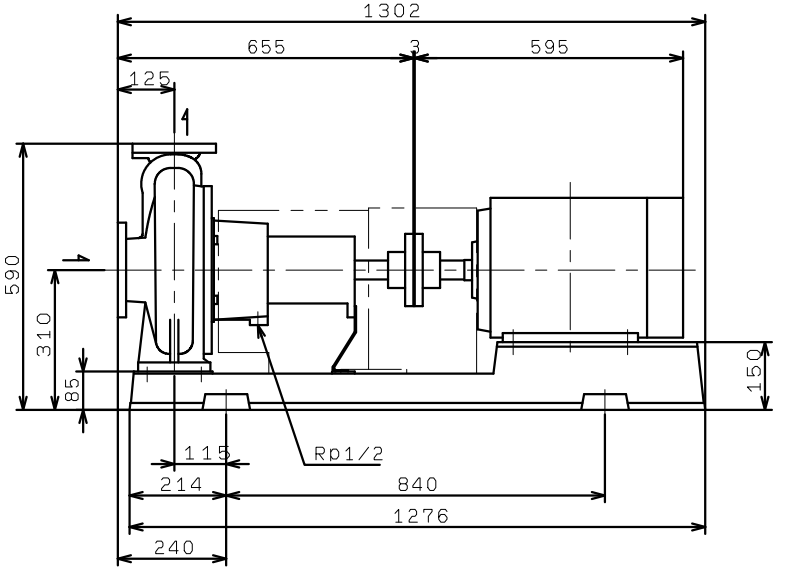
(VC86)