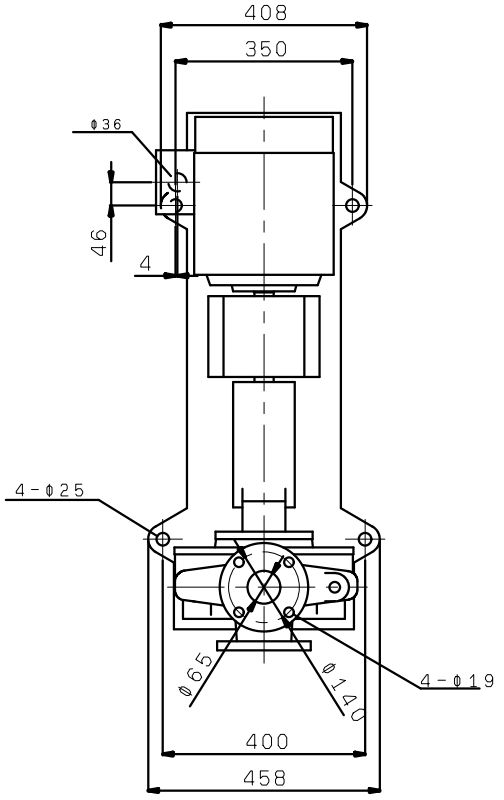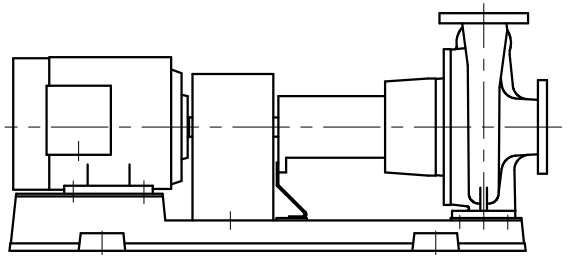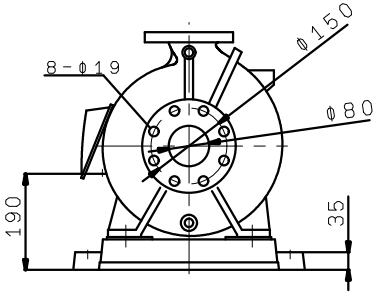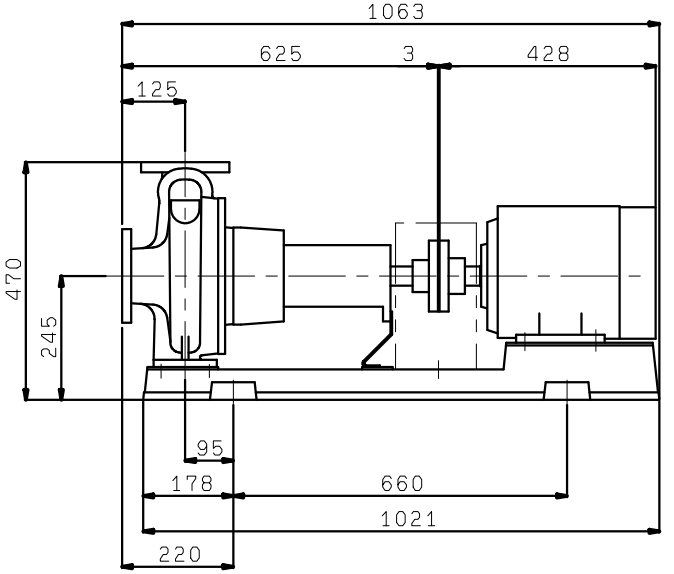GDL806M4ME5.5