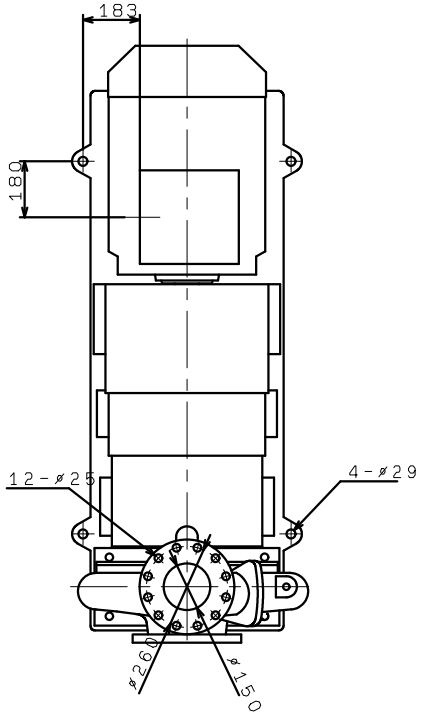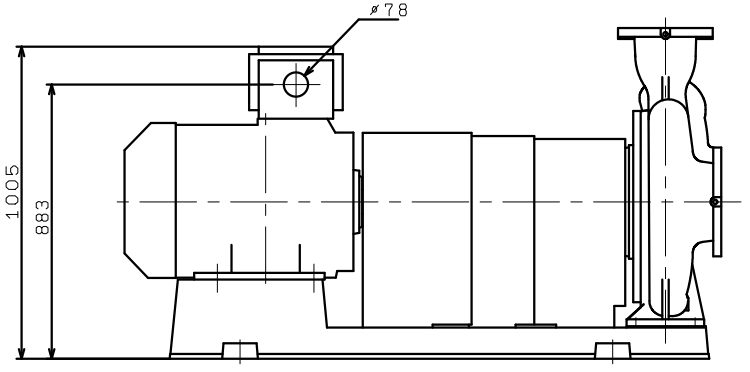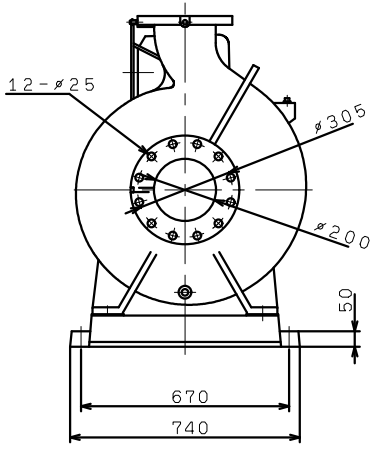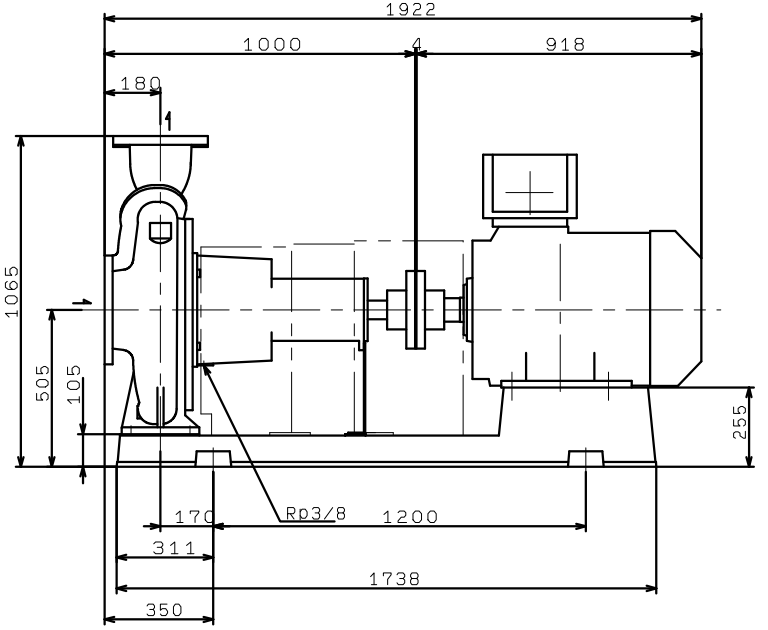GDFQ2005M4ME75
(VC86)