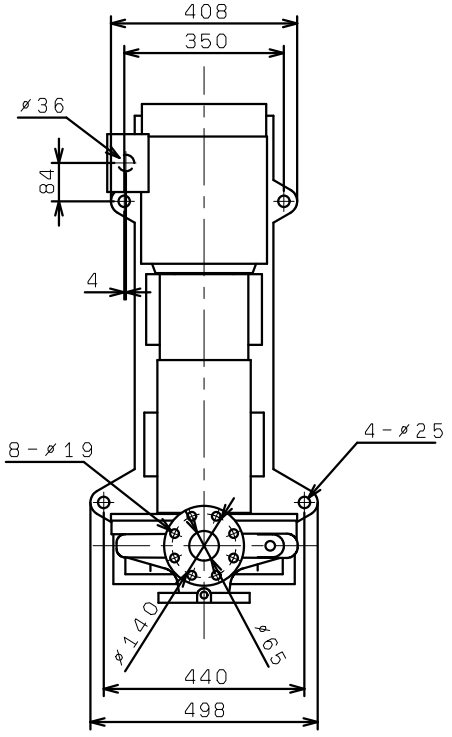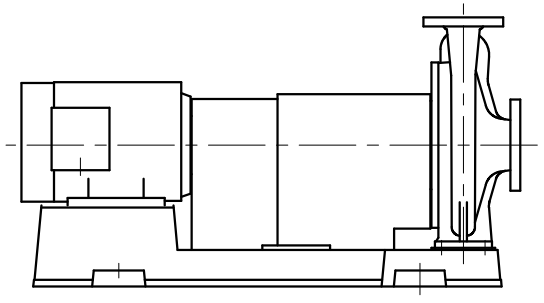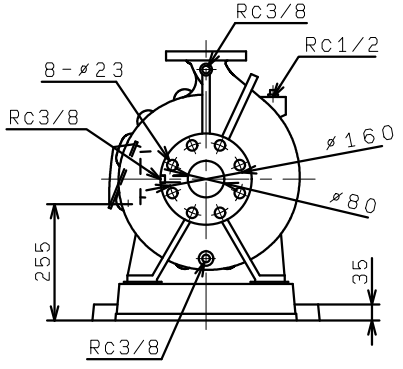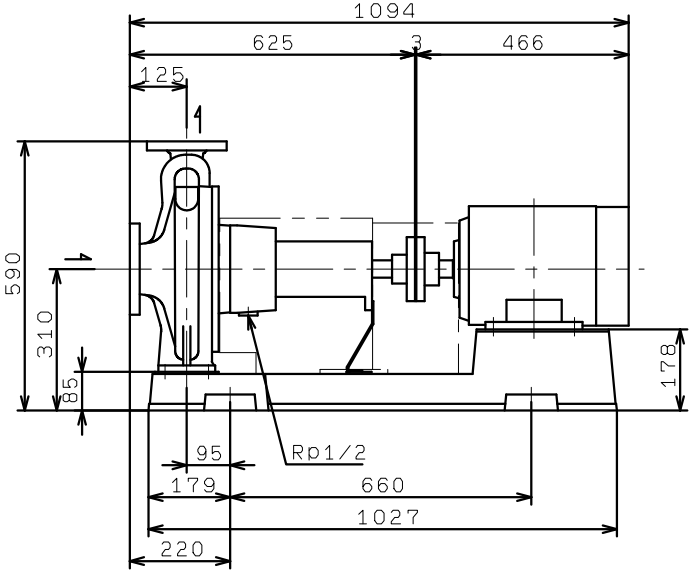GDFM805M4ME7.5
GDFM806M4ME7.5
(VC86)