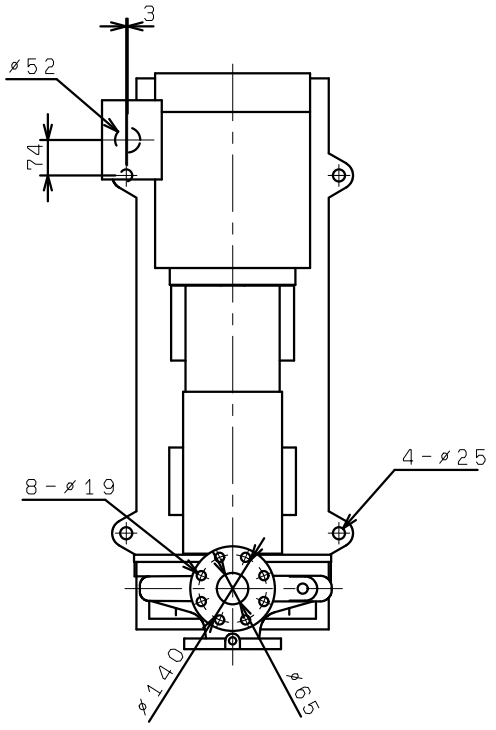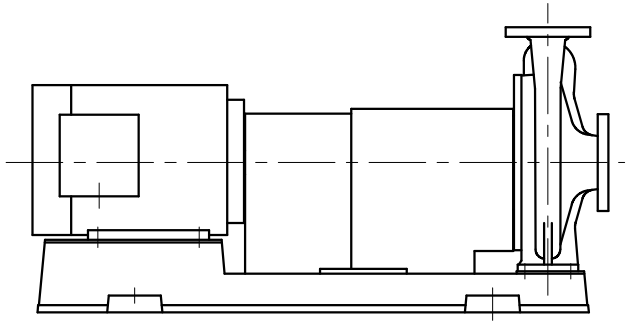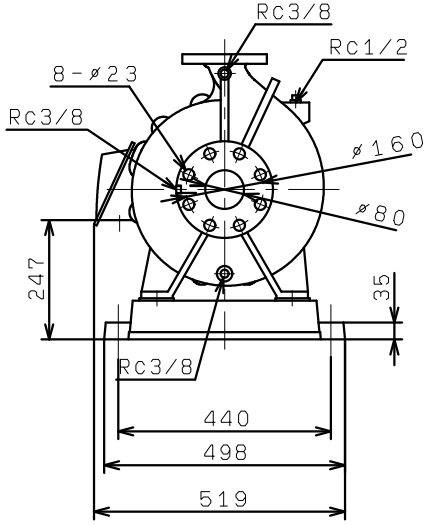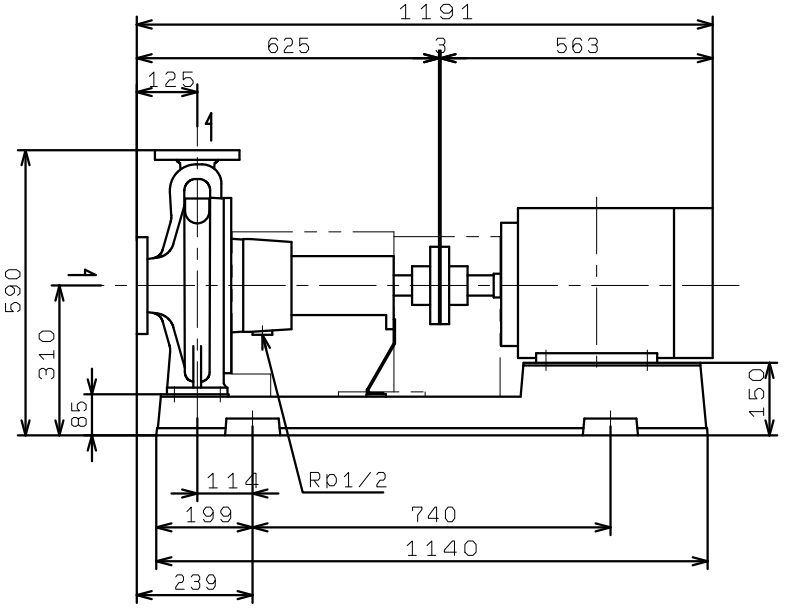GDFM806M4ME11
(VC86)