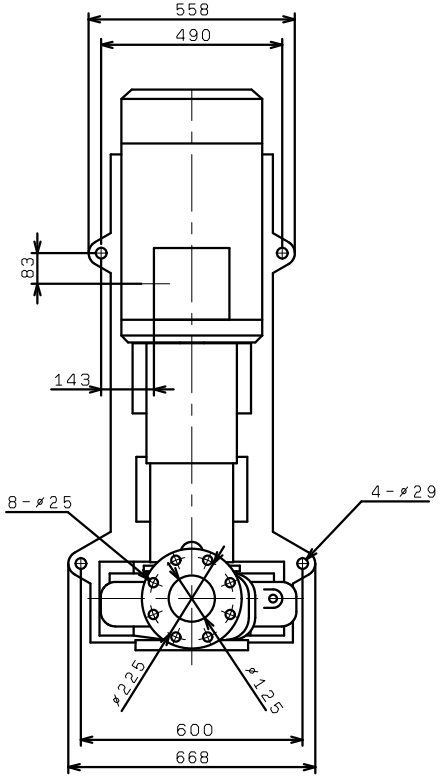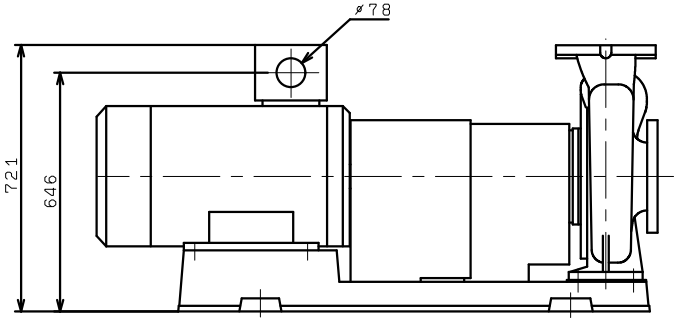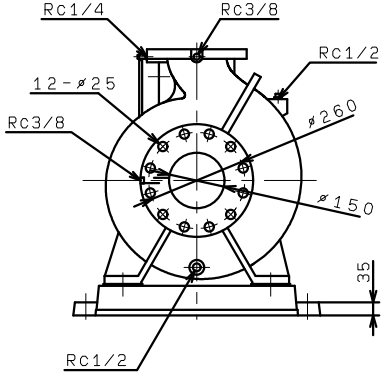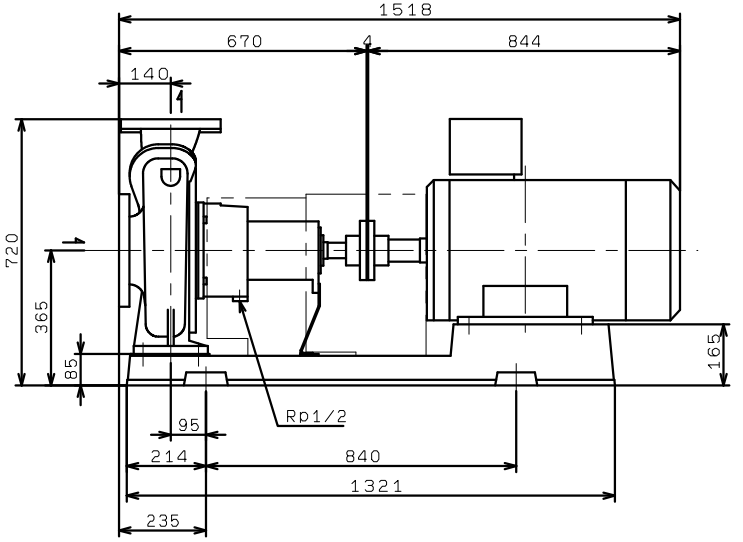GDFM1505M4ME37
GDFM1506M4ME37
GDFM1506M4ME45
(VC86)