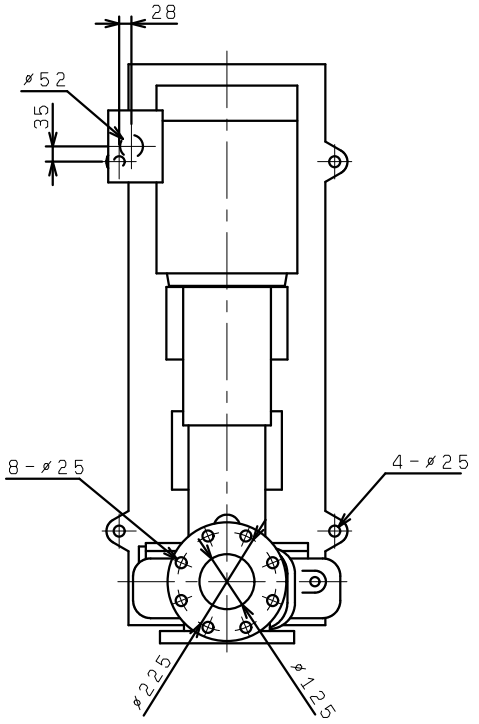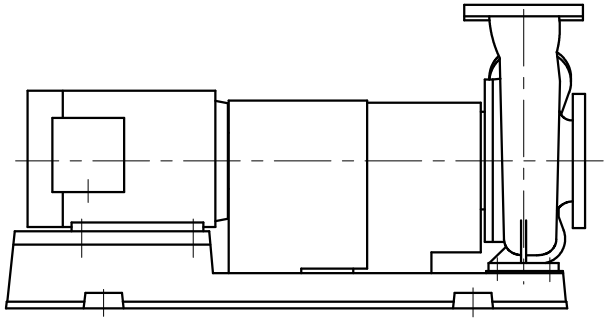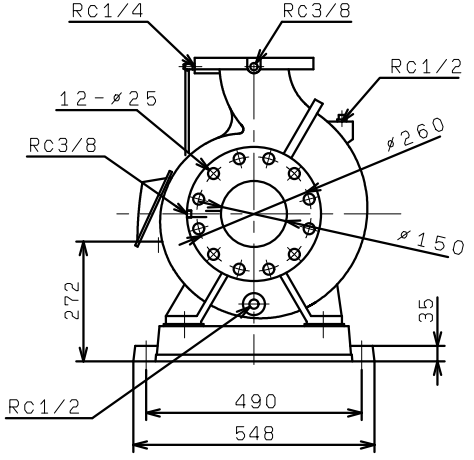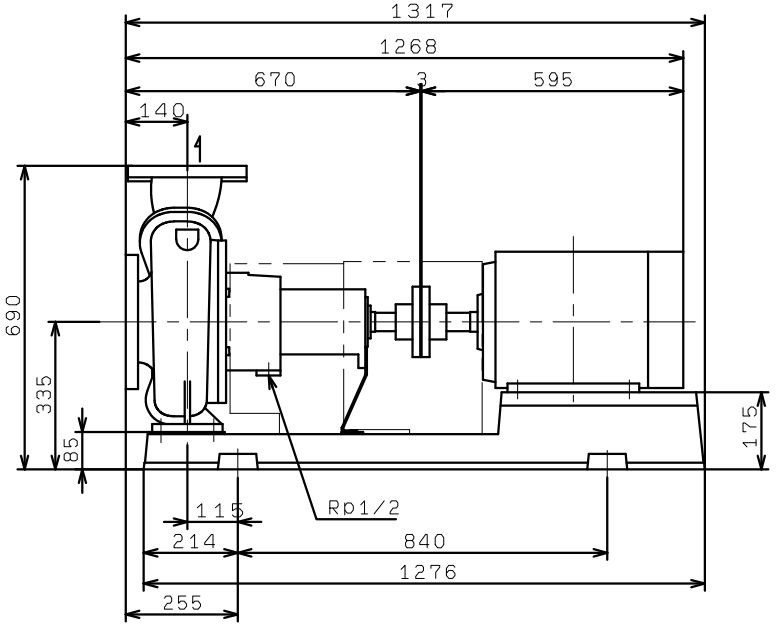GDFL1505M4ME15
GDFL1506M4ME15
(VC86)