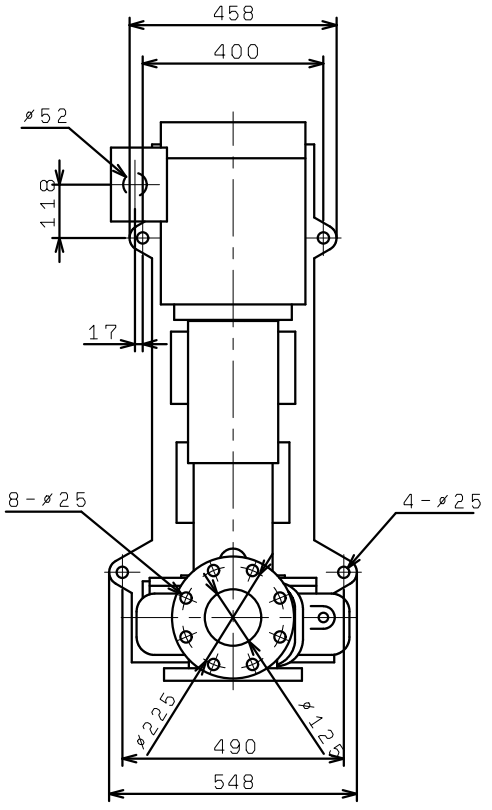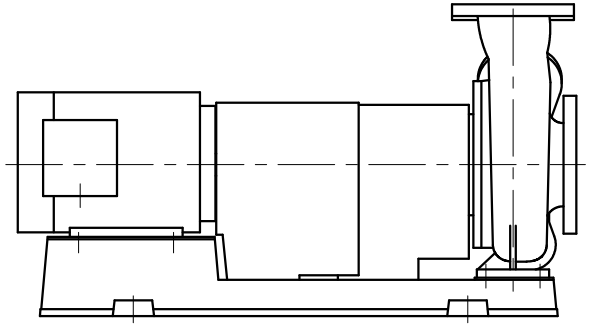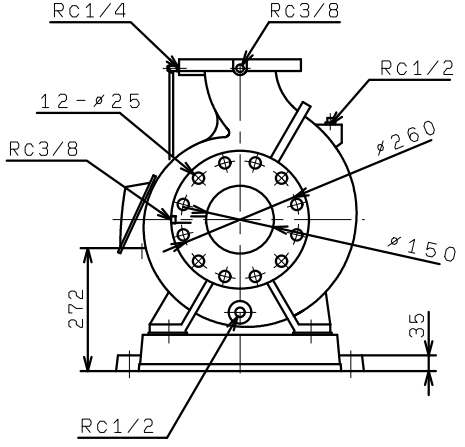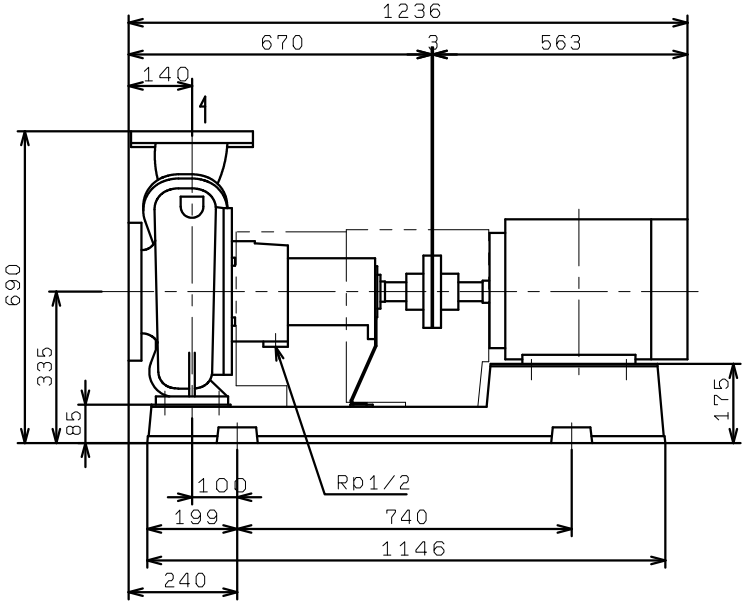GDFL1505M4ME11
(VC86)