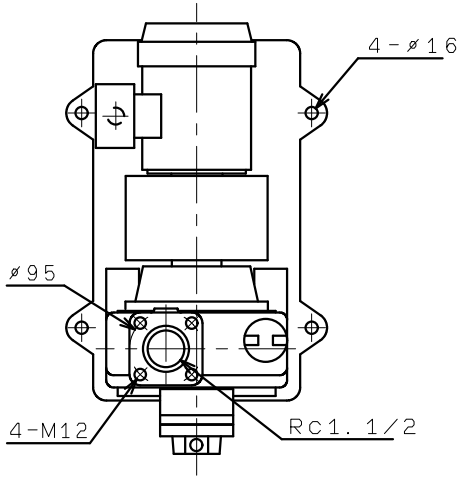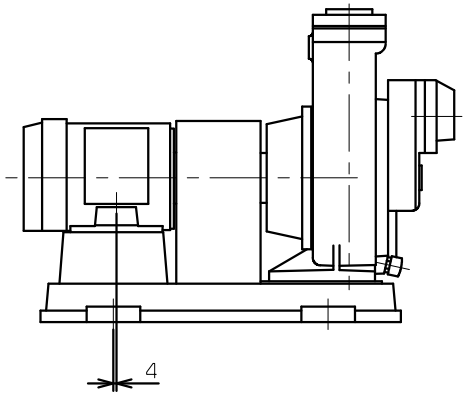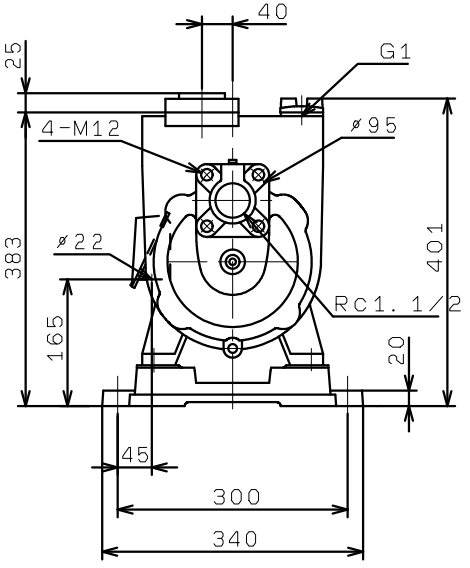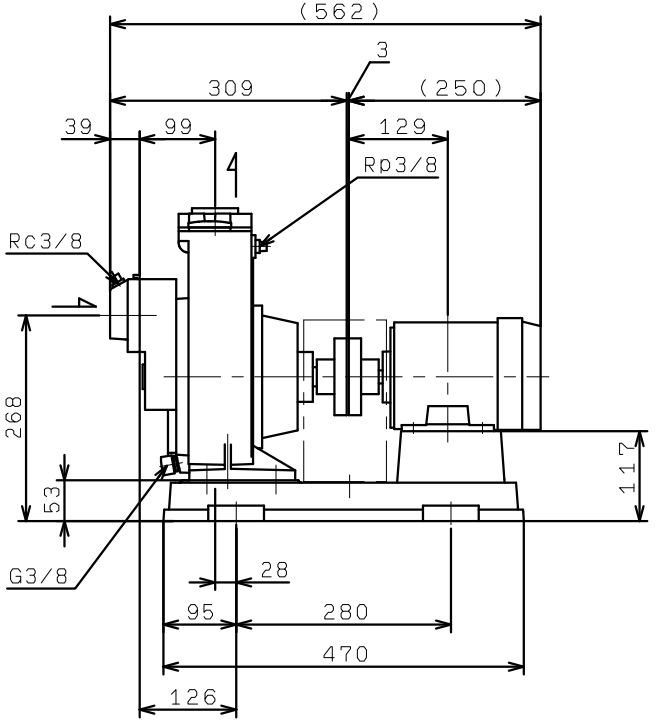FSZ405M0.4T
STD,VC51