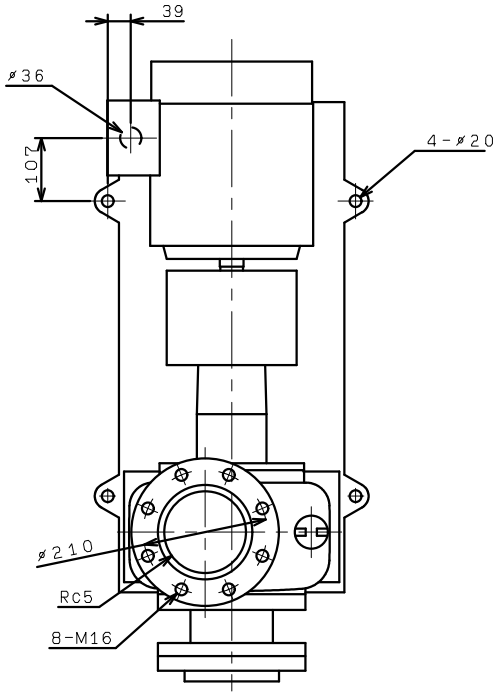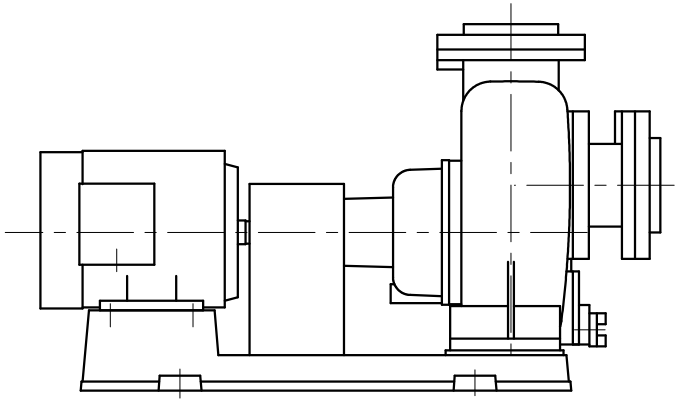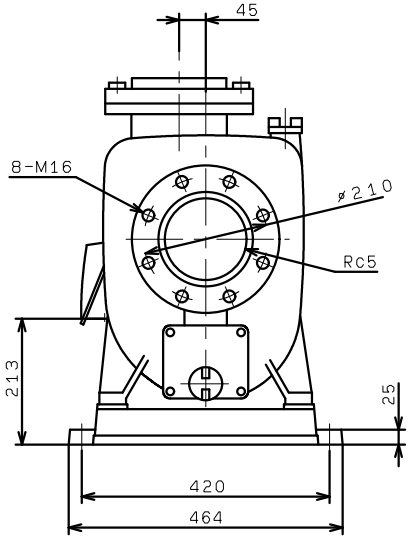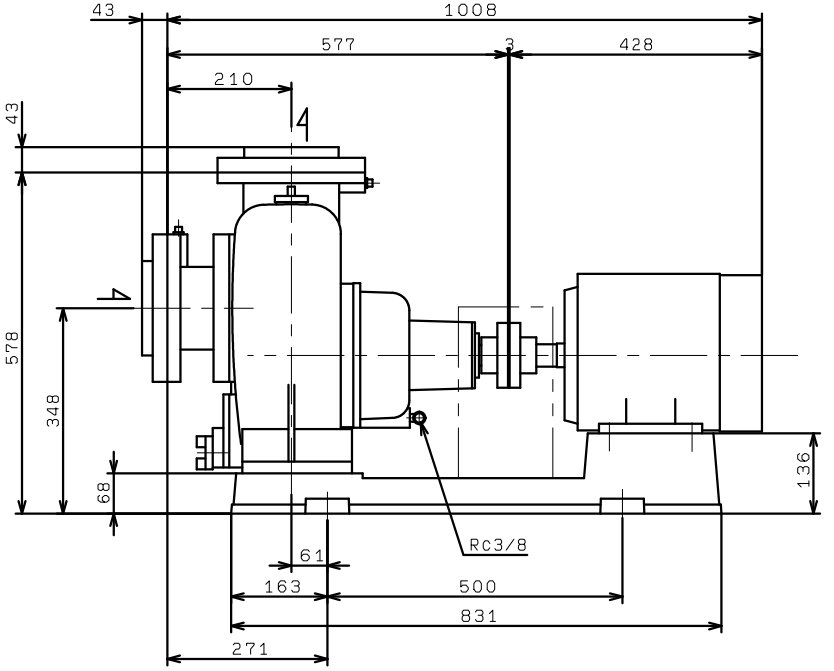FSZ1255ME5.5