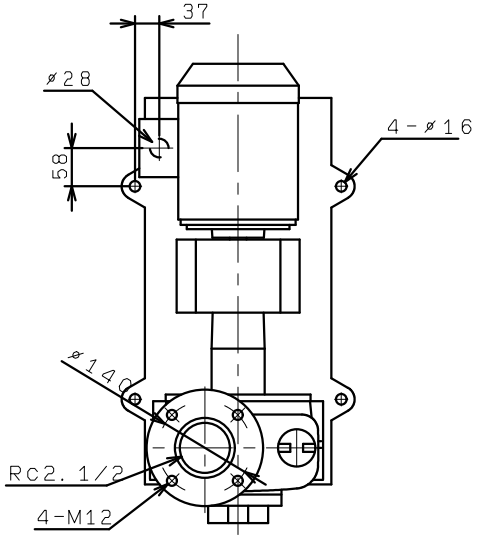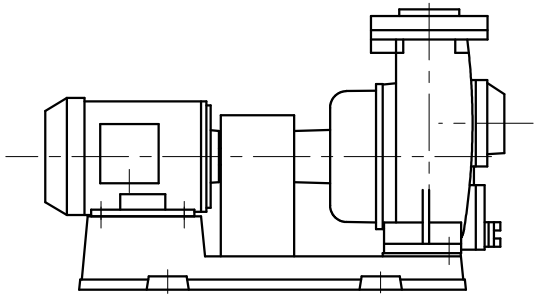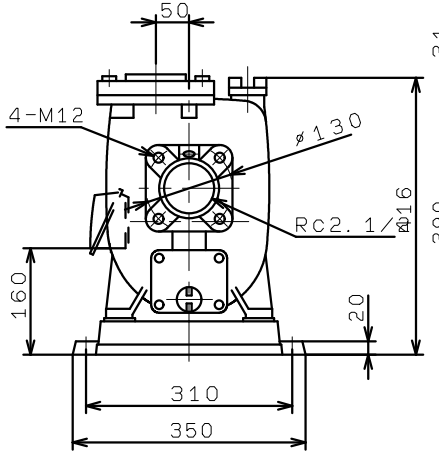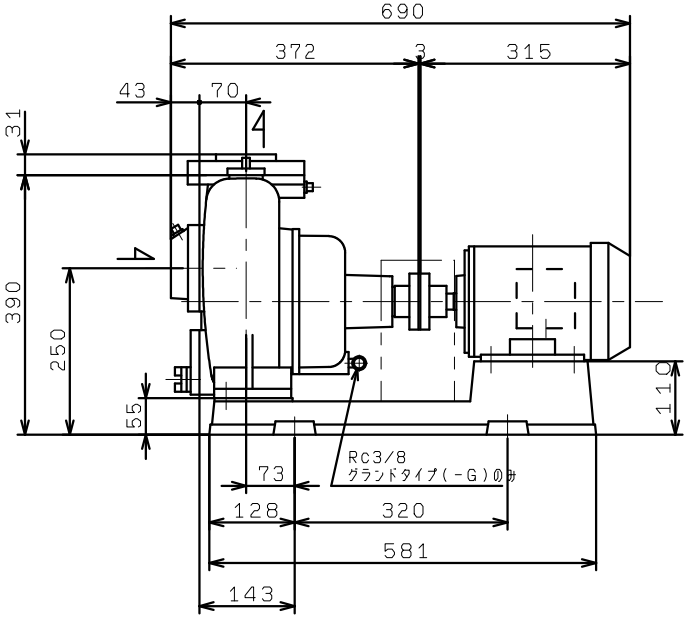FS655G4ME1.5
FS655M4ME1.5