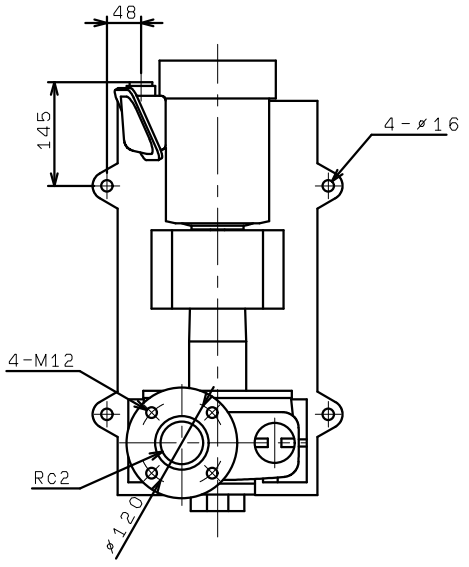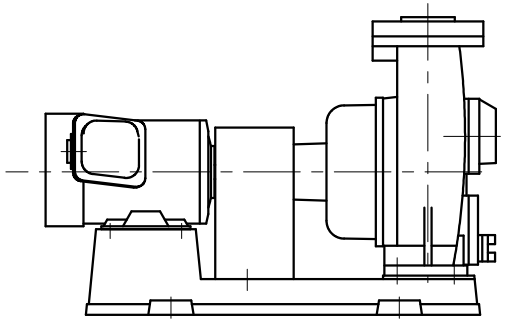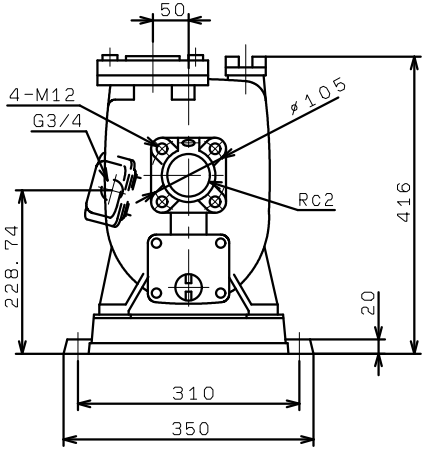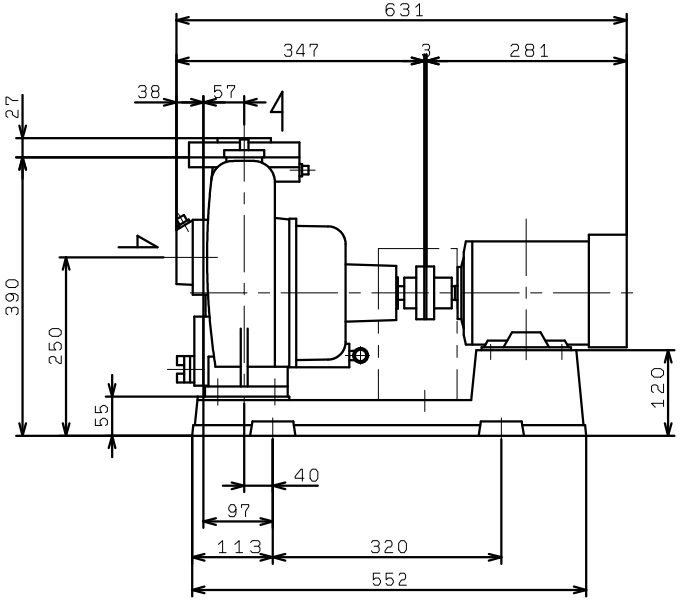FS505G4ME0.75
FS505M4ME0.75
(VC30)