FS1255G4ME5.5
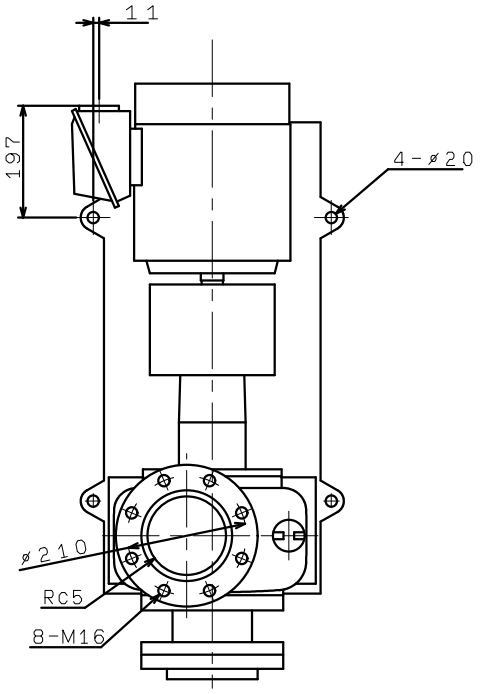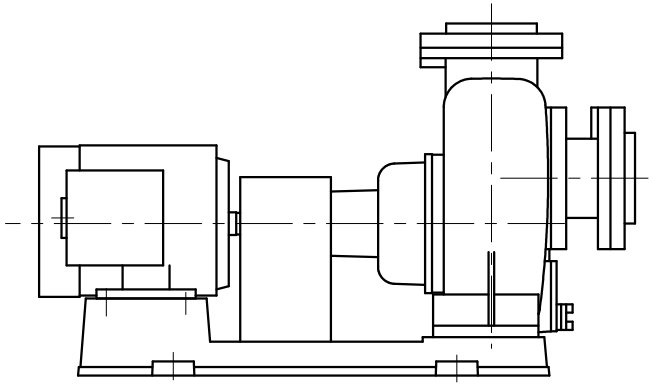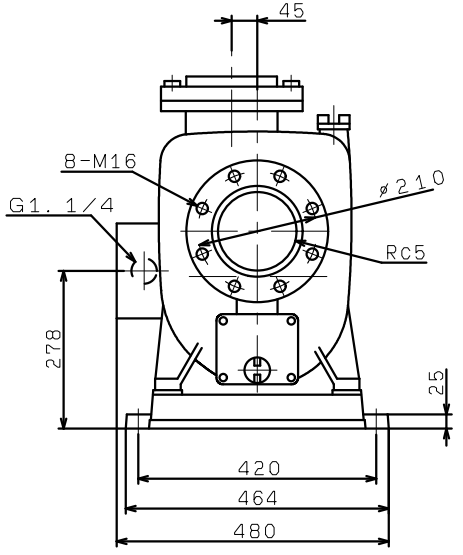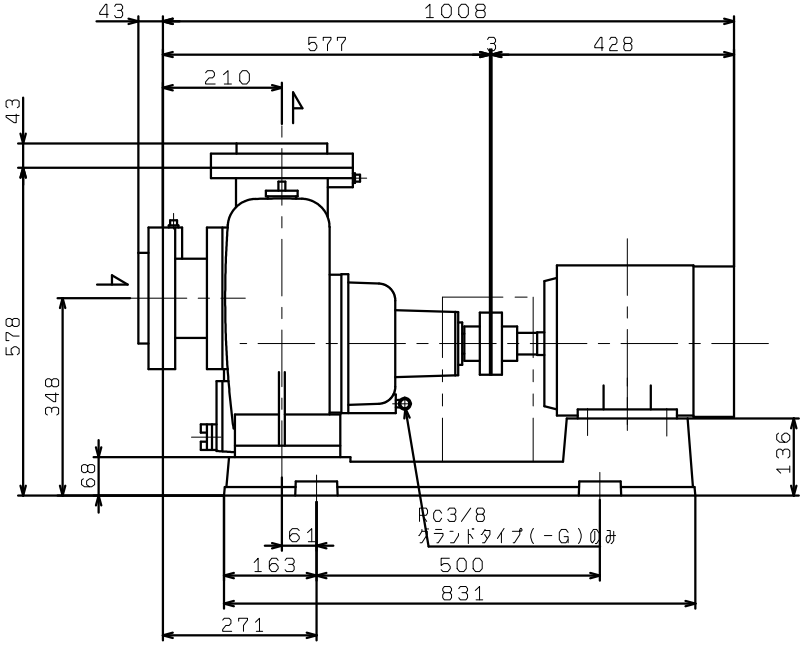
(VC30)