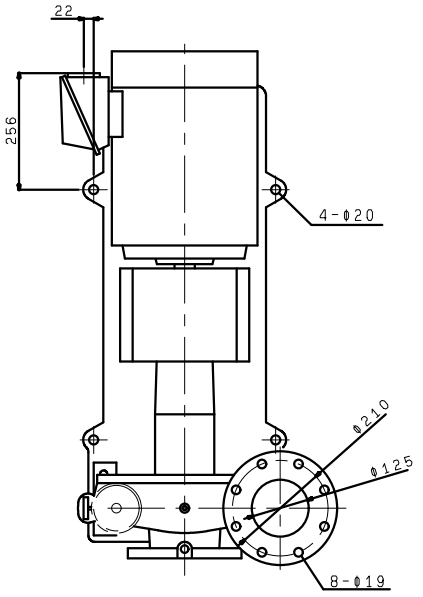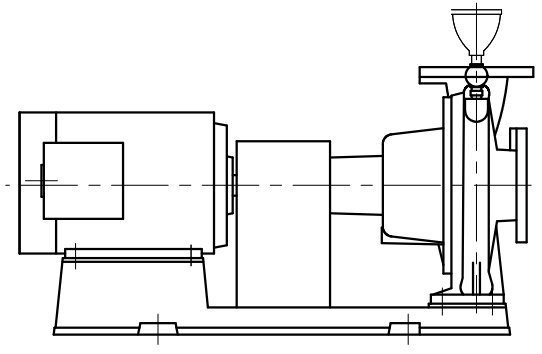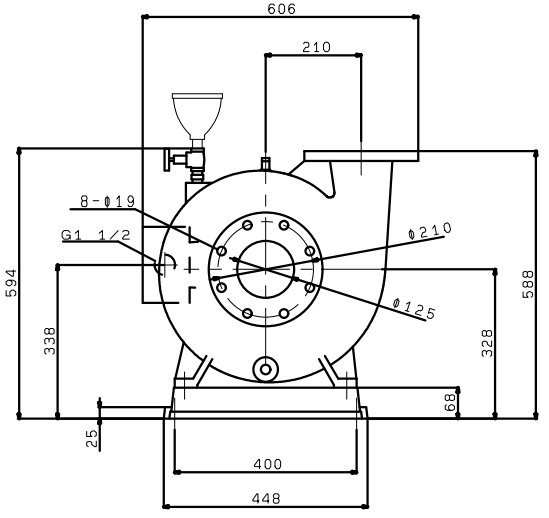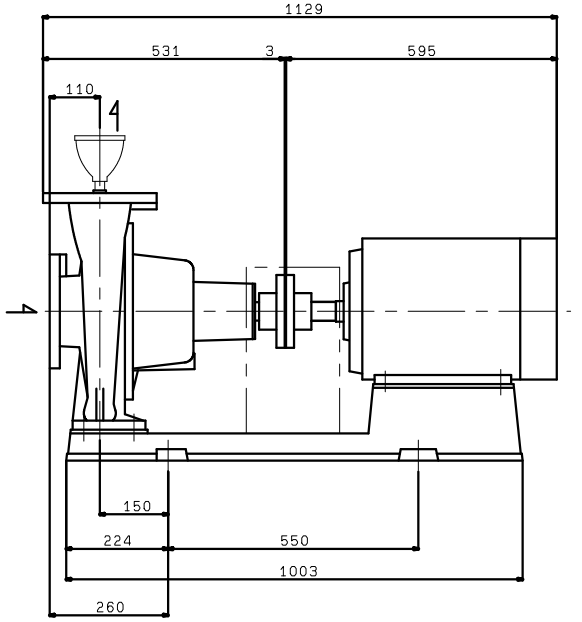F1255ME15
(VC30)