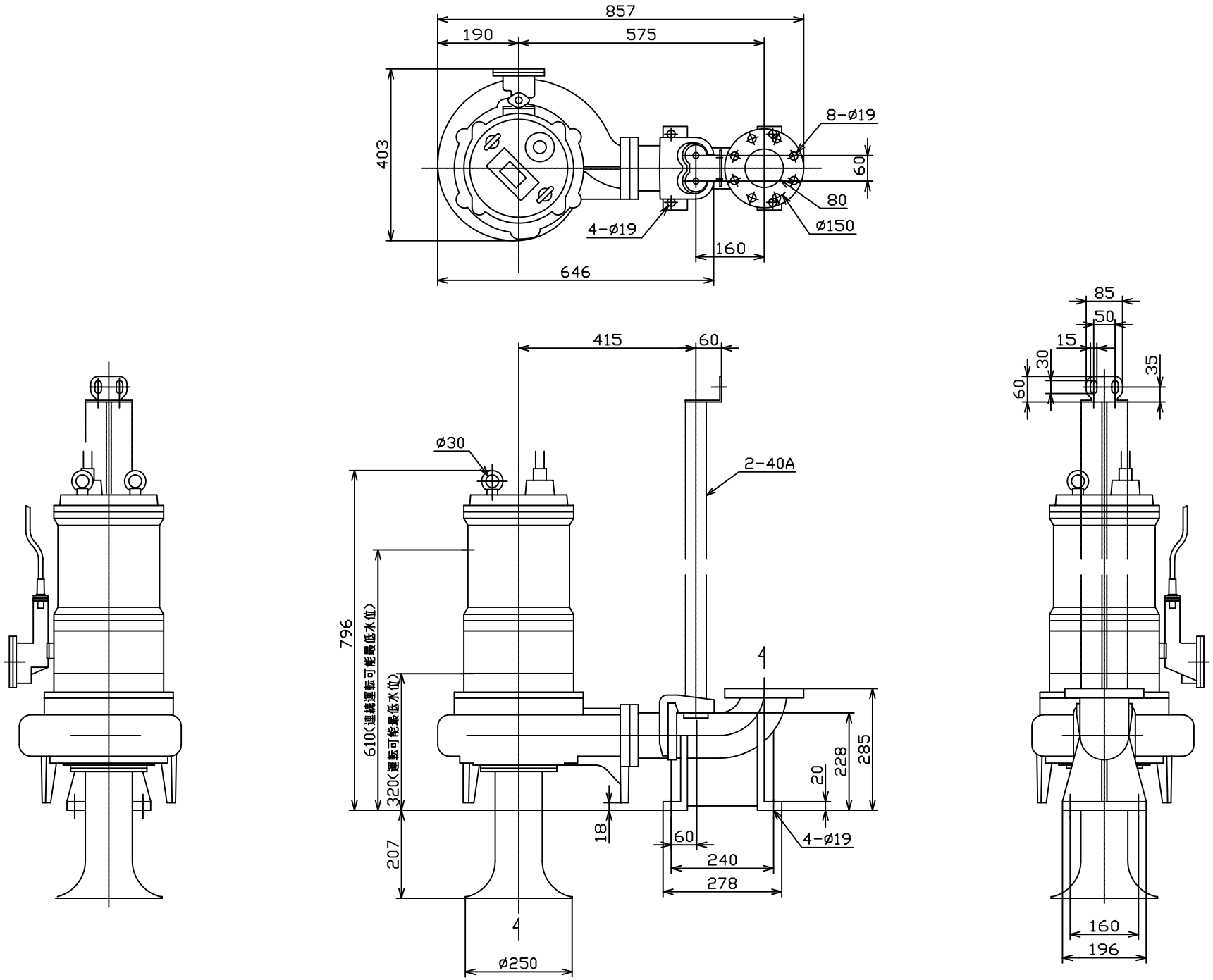BUM805-7.5
BUM806-7.5
VC81,82,83,84,85,86