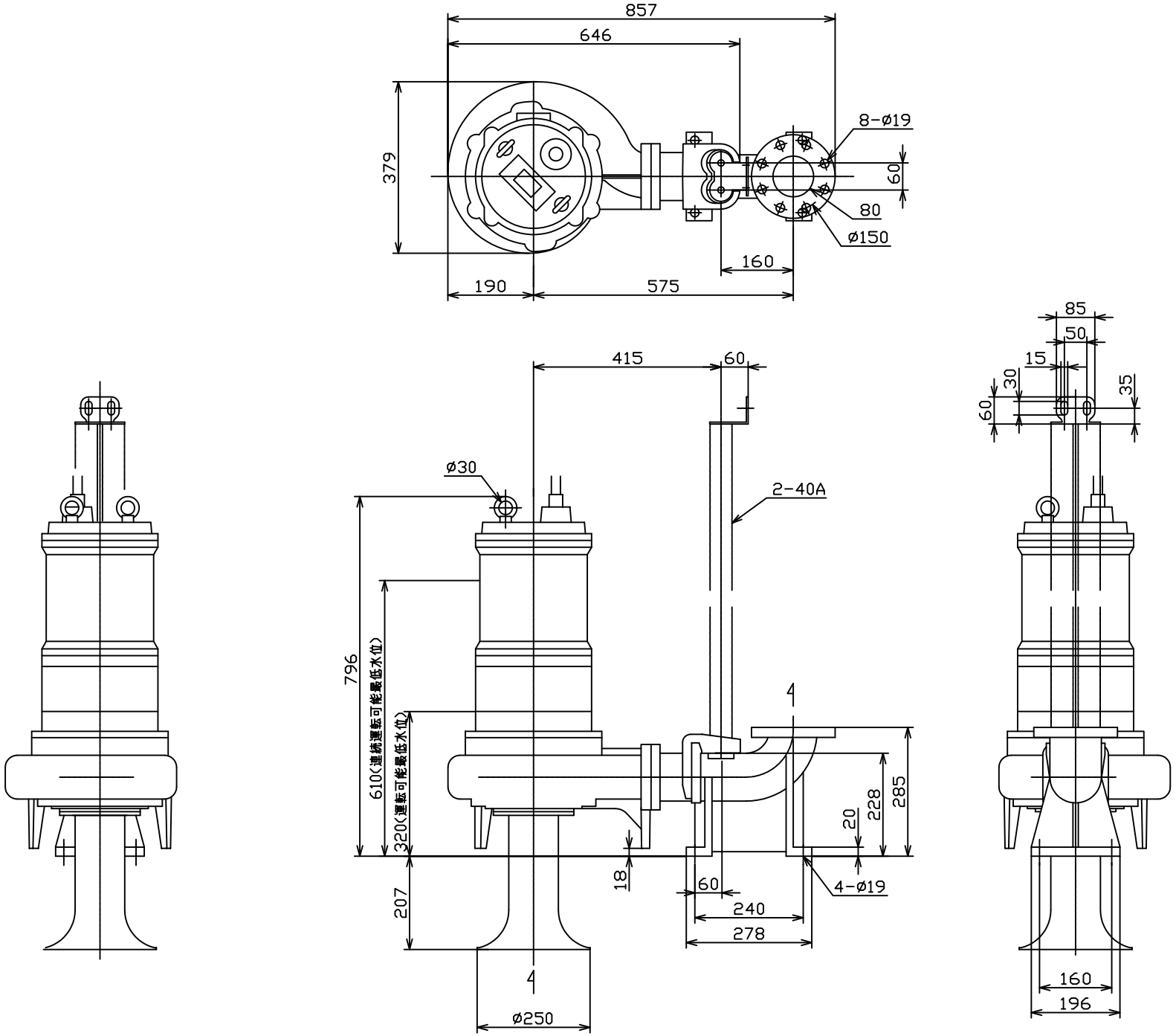# BUM805-7.5
# BUM806-7.5