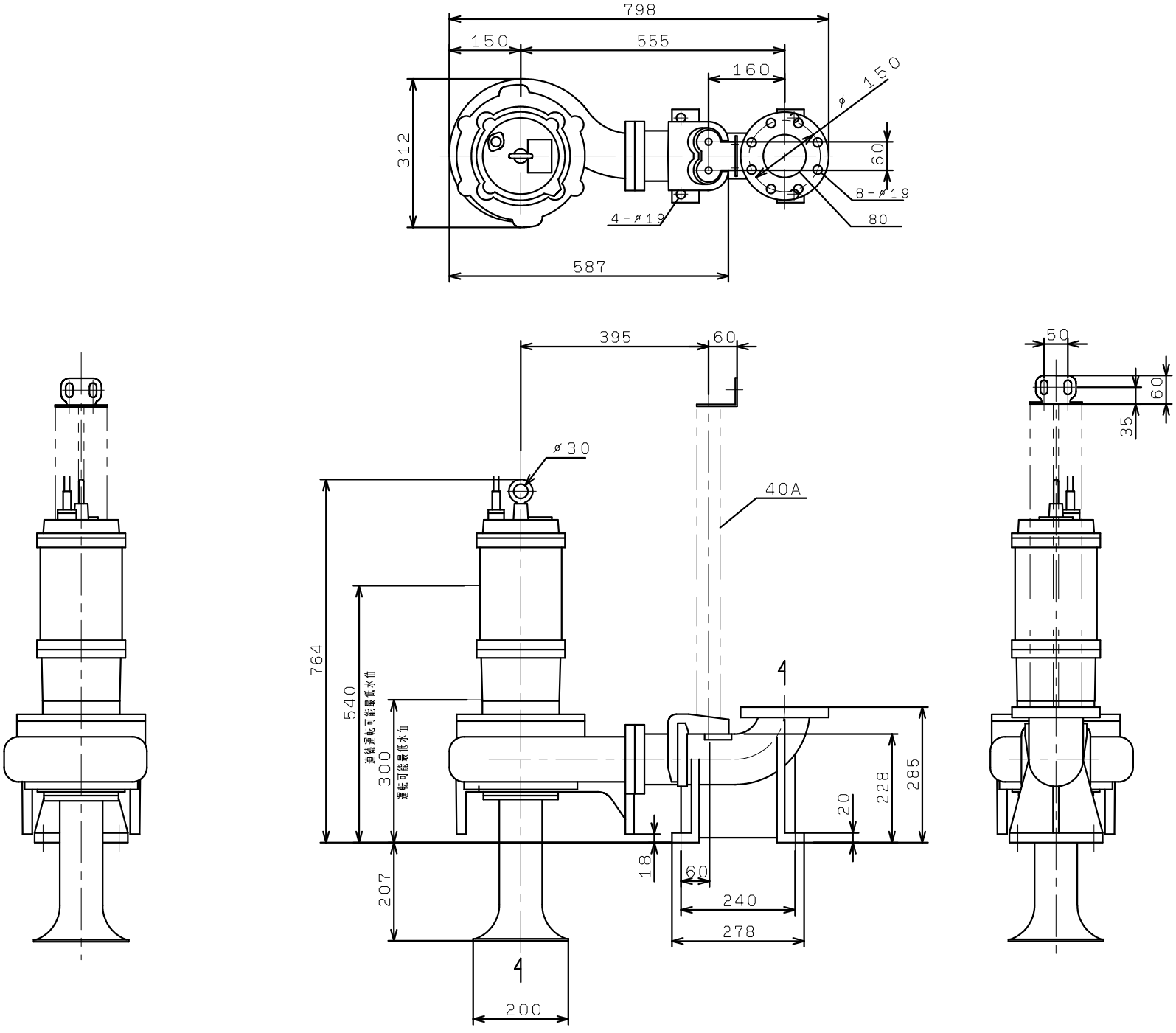BUM805-2.2
BUM806-2.2