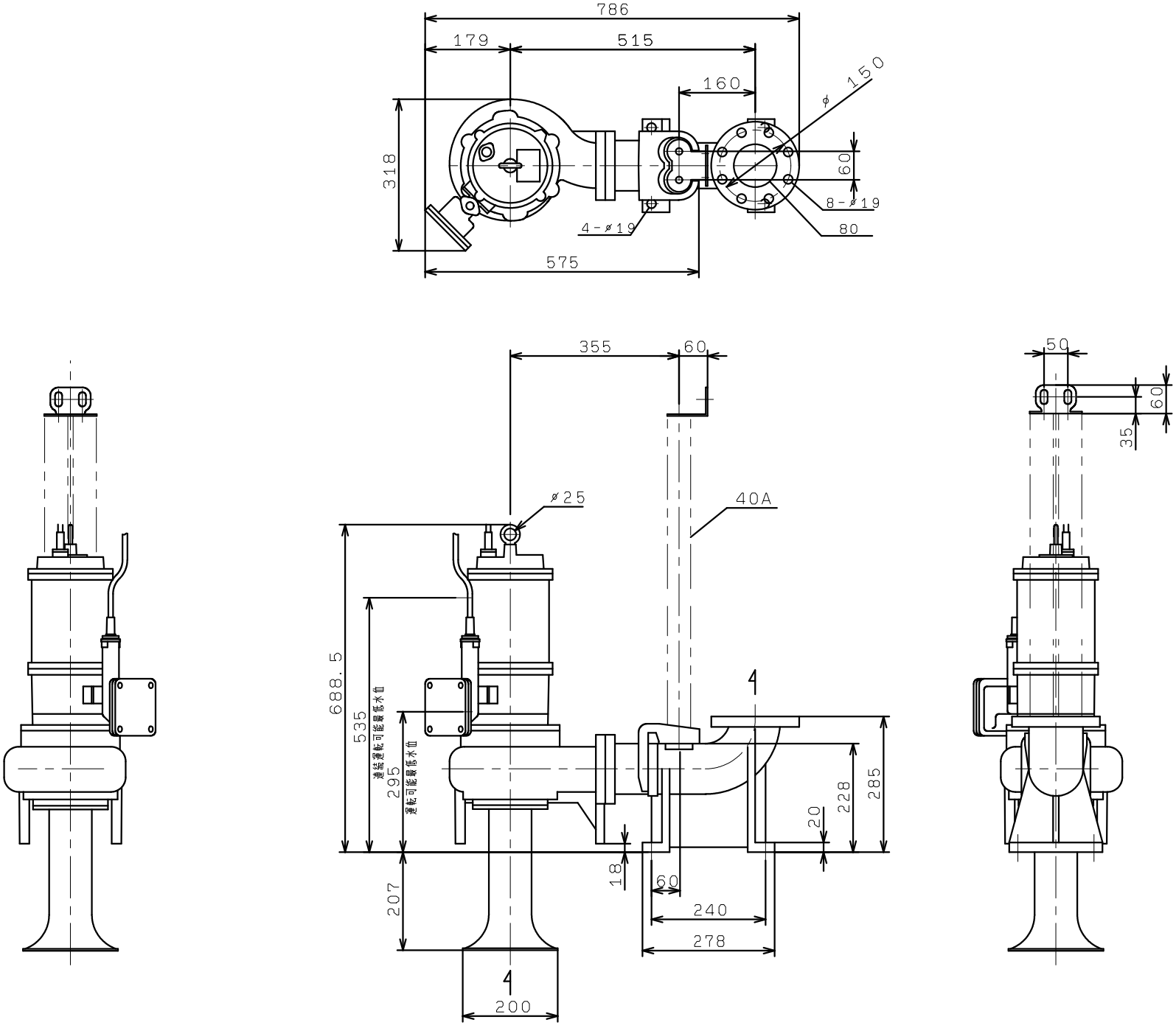BUM805-1.5
BUM806-1.5
VC81, 82, 83