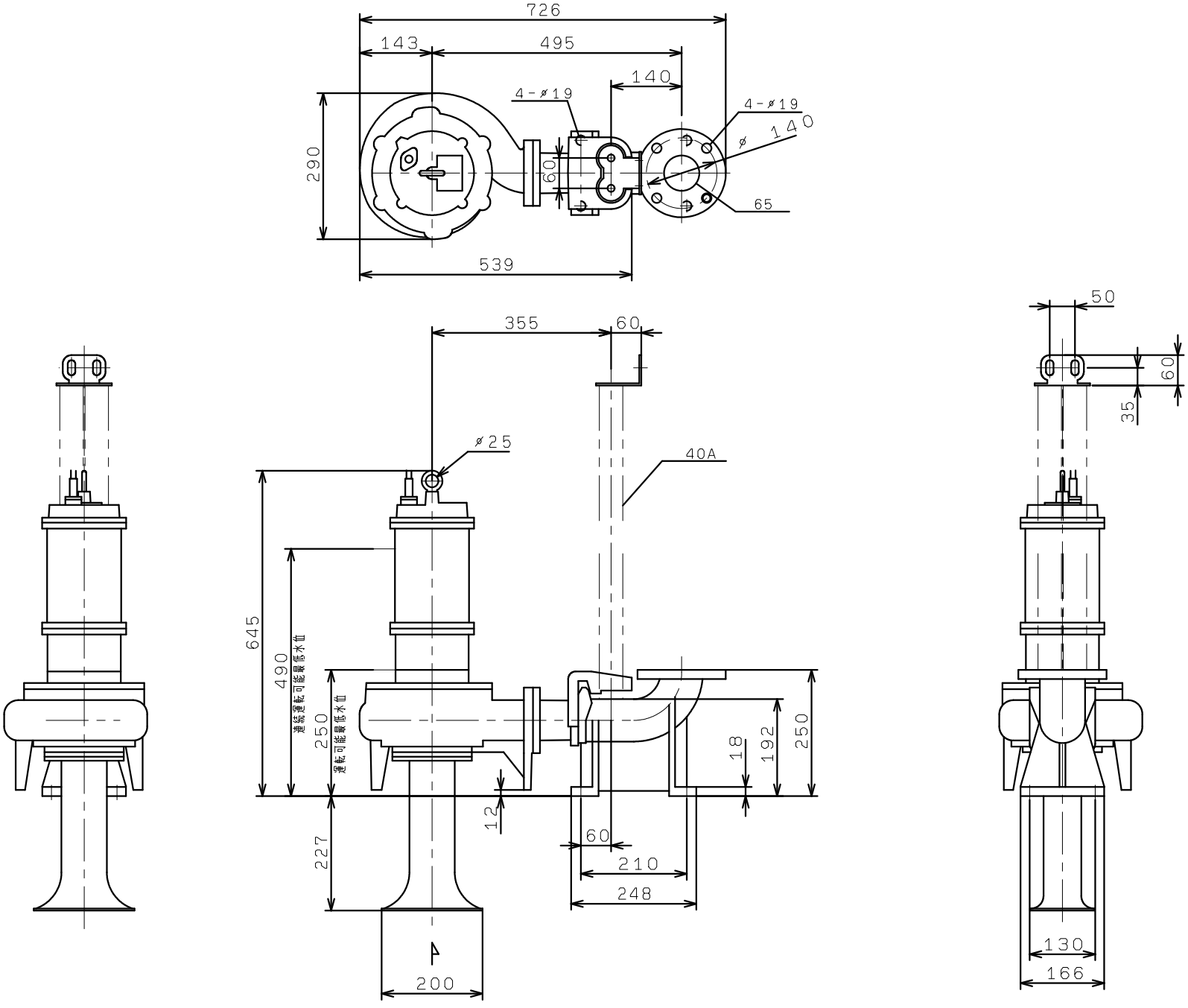BUM655-1.5
BUM656-1.5