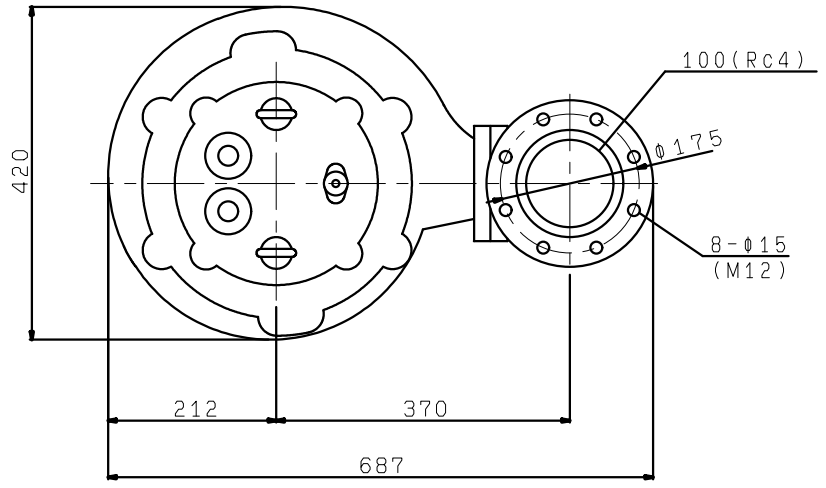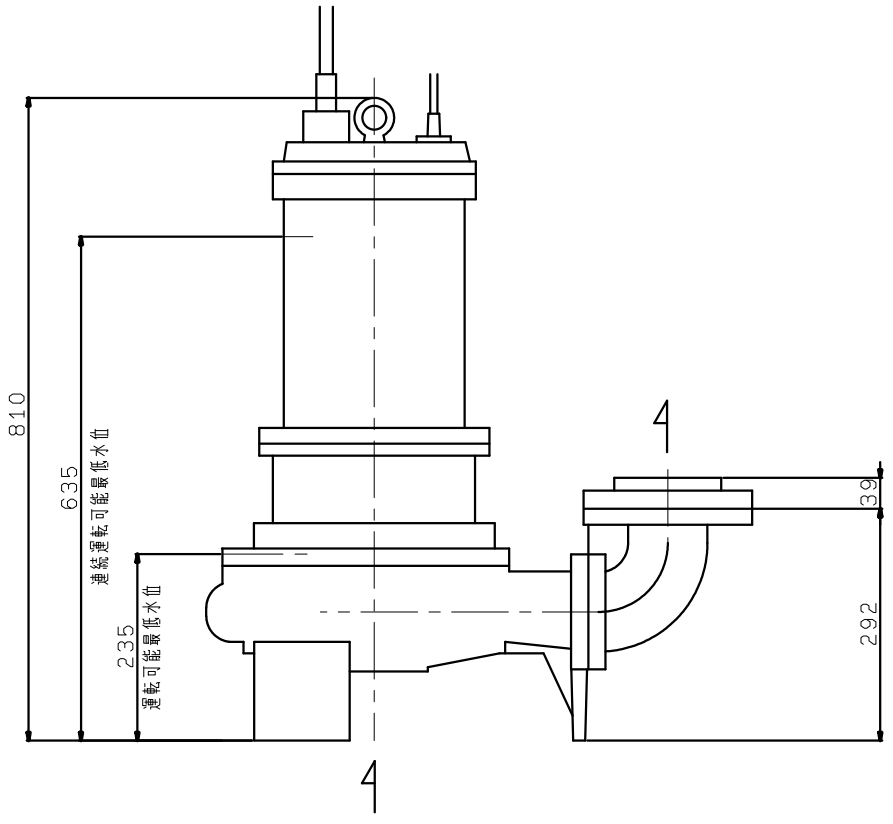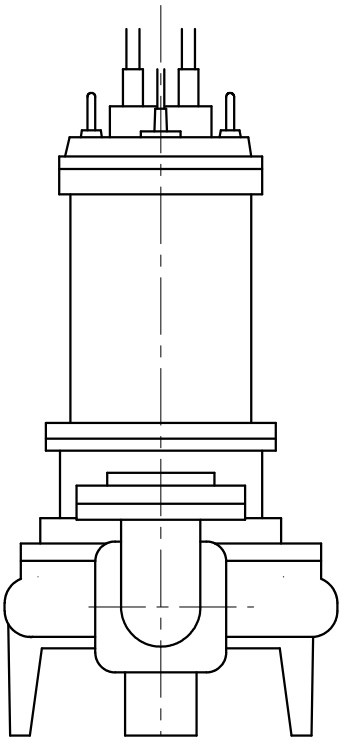BU4-1005/1006-15